Pend Oreille County
Community Development Department
P. O. Box 5066 Newport, Washington 99156-5066
Phone: 509-447-4821 Fax: 509-447-5890

Mike Lithgow
Community Development Director

Rick J Cruse
Building Inspector / Fire Marshal

PRESCRIPTIVE RESIDENTIAL DECK CONSTRUCTION GUIDE

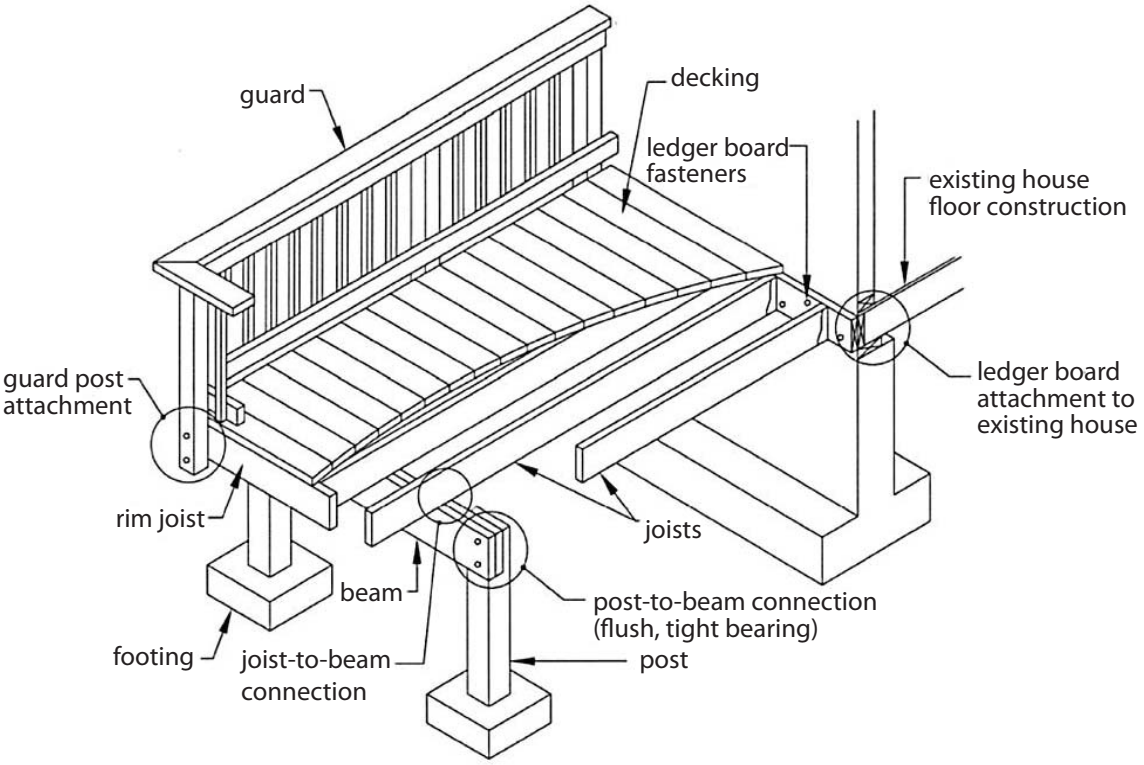

Where applicable, provisions and details contained in this document are based on the International Residential Code (IRC) [bracketed text references applicable sections of the IRC]. Deck structural failures result in the largest numbers of injuries and fatalities of all residential building failures. Railings and deck connections to the house are leading areas of failure. Experience has shown that wrapping beams and other non-preservative treated structural deck members with finish materials, may lead to accelerated deterioration of these members due to moisture retention. Proper techniques must be used to prevent moisture build-up. This handout suggests some methods to achieve safer deck construction and may assist in the design of specific deck plans. This design assistance sheet is intended to provide some basics of private residential deck construction. Additional information can be found at libraries, home improvement stores, and building departments.

Please note that while every effort is made to assure the accuracy of the information contained in this brochure it is not warranted for accuracy. This document is not intended to address all aspects or regulatory requirements for a project and should serve as a starting point for your investigation.

CONTENTS

MINIMUM REQUIREMENTS 2
DECKING REQUIREMENTS 3
JOIST SIZE 3
BEAM SIZE & ASSEMBLY REQUIREMENTS 5
DECK FRAMING PLAN.....7
JOIST-TO-BEAM CONNECTION.....8
JOIST HANGERS.....8
POST REQUIREMENTS.....8
RIM JOIST REQUIREMENTS.....9
FOOTINGS.....10
LEDGER ATTACHMENT REQUIREMENTS..... 11
FRAMING AT CHIMNEY OR BAY WINDOW 11
PROHIBITED LEDGER ATTACHMENTS 13
LEDGER BOARD FASTENERS.....13
FREE-STANDING DECKS 15
DECK STABILITY.....15
GUARD REQUIREMENTS.....16
GUARD POST ATTACHMENTS.....17
STAIR REQUIREMENTS 18
STAIR HANDRAIL REQUIREMENTS 19
STAIR LIGHTING REQUIREMENTS 19

MINIMUM REQUIREMENTS

1. This document applies to single level residential wood decks only.

2. All lumber shall be identified by the grade mark of, or certificate of inspection issued by, an approved lumber grading or inspection bureau or agency (www.alsc.org). All lumber in contact with the ground shall be approved preservative treated wood suitable for ground contact. [R317.1.2]

3. All nails shall meet the requirements of ASTM F 1667. Threaded nails as stated in this document include helical (spiral) and annular (ring-shank) nails. Wood screws shall meet the requirements of ANSI/ASME B18.6.1. Bolts and lag screws shall meet the requirements of ANSI/ASME B18.2.1.

4. Throughout this document, 1/2" diameter bolts and lag screws are specified for various connections. Edge distance and spacing requirements are based on 1/2" diameter fasteners. If larger (or smaller) fasteners are specified, edge distance and spacing needs to be adjusted.

5. To resist corrosion, the following is required [R317.3]:
   - All screws, bolts, and nails for use with preservative treated wood shall be hot-dipped zinc-coated galvanized steel, stainless steel, silicon bronze, or copper. Fasteners to be hot-dipped galvanized shall meet the requirements of ASTM A153, Standard Specification/or Zinc Coating (Hot-Dip) on Iron and Steel Hardware, Class D for fasteners 3/8" diameter and smaller or Class C for fasteners with diameters over 3/8".

   - Fasteners other than nails and timber rivets shall be permitted to be of mechanically deposited zinc-coated steel with coating weights in accordance with *ASTM B 695*, Class 55, minimum.

   - All hardware (joist hangers, cast-in-place post anchors, etc.) shall be galvanized or shall be stainless steel. Hardware to be hot-dipped prior to fabrication shall meet *ASTM A 653, Standard Specification for steel Sheet, Zinc-Coaled (Galvanized) or Zinc-Iron Alloy-Coated (Galvannealed) by the Hot-Dip Process*, G-18S coating. Hardware to be hot-dipped galvanized after fabrication shall meet *ASTM A123, Specification for Zinc (Hot-Dip Galvanized) Coatings on Iron and Steel Products.*

   - Other coated or non-ferrous fasteners or hardware shall be as approved by the authority having jurisdiction.

6. **Decks supporting large concentrated loads such as hot tubs are beyond the scope of this document.**

7. This document does not apply to decks which will experience snow loads, snow drift loads, or sliding snow loads that exceed 40 psf. This document does not address wind or seismic design issues.

8. Flashing shall be corrosion-resistant metal [R703.8] of minimum nominal 0.019-inch thickness or approved non-metallic material. Aluminum should not be used in direct contact with lumber treated with preservatives that contain copper such as ACQ, Copper Azole, or ACZA.

9. Decks shall not be used or occupied until final inspection and approval is obtained.

10. This document is not intended to preclude the use of other construction methods or materials not shown herein.

DECKING REQUIREMENTS

All decking material shall be composite or dimension lumber (2" nominal thickness) or span rated decking in accordance with the American Lumber Standard Committee *Policy for Evaluation of Recommended Spans for Span Rated Decking Products (November 5, 2004*). Attach decking to each joist with 2-8d threaded nails or 2-#8 screws. Space decking boards approximately 1/8" apart. See Figure II for decking connection requirements at the rim joist. Decking may be placed from an angle perpendicular to the joists to an angle of 45 (reduced joist spacing may be required). Each segment of decking must bear on a minimum of 4 joists (or 4 supports).

Decking not meeting these requirements may be substituted when the product has been approved by the authority having jurisdiction.

JOIST SIZE

The span of a joist is measured from the centerline of bearing at one end of the joist to the centerline of bearing at the other end of the joist and does not include the length of the overhangs. Use Table 1 to determine joist span based on lumber size and joist spacing. Use Table 1A for wood treated with pressure perservatives. See Figure IA through Figure 2 for joist span types.

FOR USE WITH NON-PRESSURE TREATED WOOD

Table 1. Joist Span

		DEAD LOAD = 10 psf					
		JOIST SPACING (inches)					
		WITHOUT OVERHANGS [1]			WITH OVERHANGS UP TO $L_J/4$ [2]		
		12	16	24	12	16	24
SPECIES	SIZE	(ft-in.)	(ft-in.)	(ft-in.)	(ft-in.)	(ft-in.)	(ft-in.)
Douglas Fir-Larch	2x6	10-9	9-9	8-1	8-6	8-6	8-1
	2x8	14-2	12-7	10-3	10-9	10-9	10-3
	2x10	17-9	15-5	12-7	15-5	15-5	12-7
	2x12	20-7	17-10	14-7	20-7	17-10	14-7
Hem-Fir	2x6	10-0	9-1	7-11	8-3	8-3	7-11
	2x8	13-2	12-0	10-2	10-8	10-8	10-2
	2x10	16-10	15-2	12-5	15-2	15-2	12-5
	2x12	20-4	17-7	14-4	20-4	17-7	14-4
Southern Pine	2x6	10-9	9-9	8-6	9-0	9-0	8-6
	2x8	14-2	12-10	11-0	11-7	11-7	11-0
	2x10	18-0	16-1	13-1	16-1	16-1	13-1
	2x12	21-9	18-10	15-5	21-9	18-10	15-5
Spruce-Pine-Fir	2x6	10-3	9-4	8-1	8-6	8-6	8-1
	2x8	13-6	12-3	10-3	10-9	10-9	10-3
	2x10	17-3	15-5	12-7	15-5	15-5	12-7
	2x12	20-7	17-10	14-7	20-7	17-10	14-7

[1] Assumes 40 psf live load, 10 psf dead load, l/360 defelction, No. 2 grade, and wet service conditions. See Figure 1B.
[2] Assumes 40 psf live load, 10 psf dead load, L/180 cantilever deflection with 220 lb point load, No. 2 grade, and wet service conditions. See Figure 1A and 2.

FOR USE WITH PRESSURE TREATED WOOD

Table 1A. Maximum Joist Spans ($L_J/4$ [2])

		Joist Spacing (o.c.)					
		Without Overhangs [1]			With Overhanges up to $L_J/4$ [2]		
Species	**Size**	**12″**	**16″**	**24″**	**12″**	**16″**	**24″**
Southern Pine	2x8	13′-8″	12′-5″	10′-2″	10′-9″	10′-9″	10′-2″
	2x10	17′-5″	15′-10″	13′-1″	15′-6″	15′-6″	13′-1″
	2x12	18′-0″	18′-0″	15′-5″	18′-0″	18′-0″	15′-5″
Douglas Fir-Larch, Hem-Fir, SPF [3]	2x8	12′-6″	11′-1″	9′-1″	9′-5″	9′-5″	9′-1″
	2x10	15′-8″	13′-7″	11′-1″	13′-7″	13′-7″	11′-1″
	2x12	18′-0″	15′-9″	12′-10″	18′-0″	15′-9″	12′-10″
Redwood, Western Cedars, Ponderosa Pine[4], Red Pine [4]	2x8	11′-8″	10′-7″	8′-8″	8′-6″	8′-6″	8′-6″
	2x10	14′-11″	13′-0″	10′-7″	12′-3″	12′-3″	10′-7″
	2x12	17′-5″	15′-1″	12′-4″	17′-5″	15′-1″	12′-4″

1 Assumes 40 psf live load, 10 psf dead load, l/360 defelction, No. 2 grade, and wet service conditions. See Figure 1B.
2 Assumes 40 psf live load, 10 psf dead load, L/180 cantilever deflection with 220 lb point load, No. 2 grade, and wet service conditions. See Figure 1A and Figure 2.
3 Incising assumed for refractory species including Douglas fir-larch, hem-fir, and spruce-pine-fir.
4 Design values based on northern species with no incising assumed.

Figure 1A. Joist Span - Deck Attached at House and Bearing Over Beam

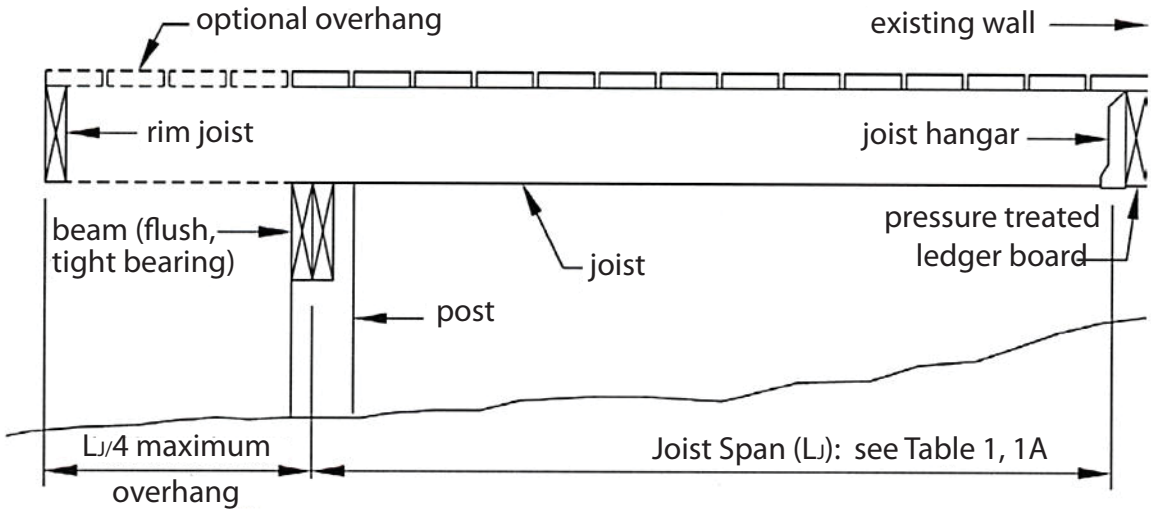

Figure 1B. Joist Span - Joists Attached at House and to Side of Beam

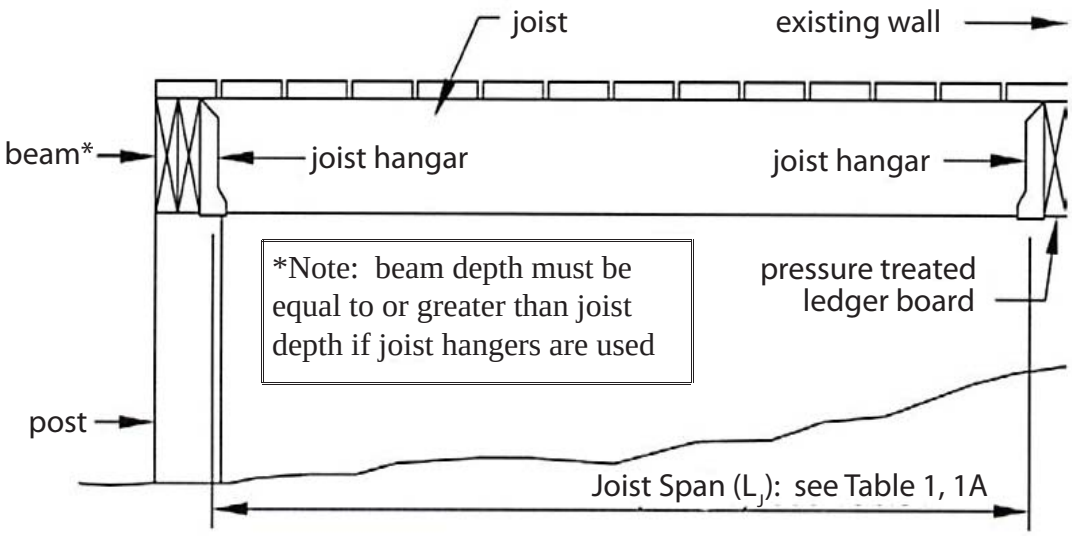

Figure 2. Joist Span - Free Standing Deck

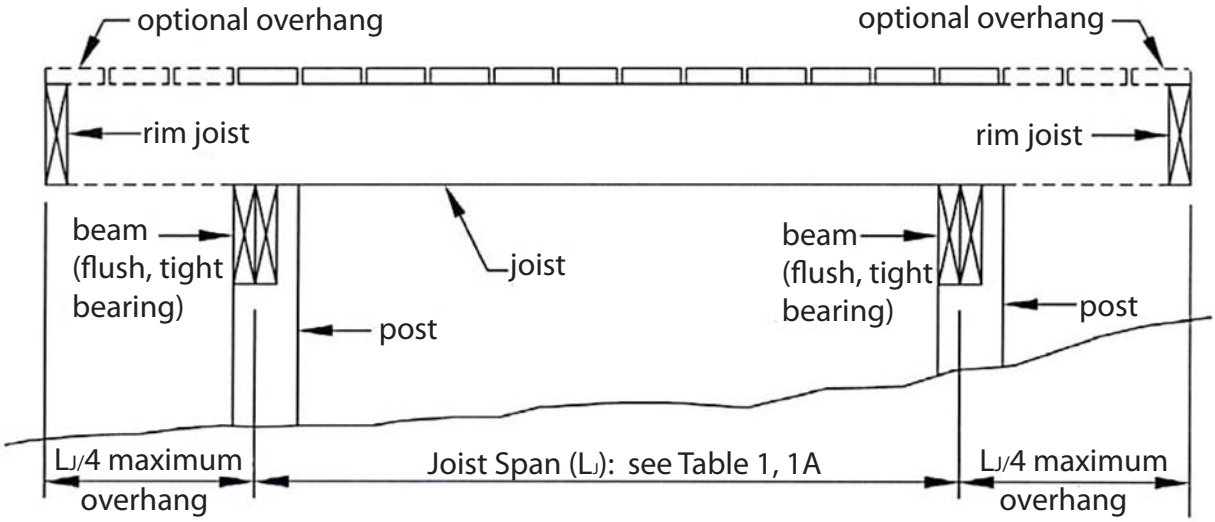

BEAM SIZE & ASSEMBLY REQUIREMENTS

Deck beam spans shall be in accordance with Table 2 and can extend past the post centerline up to $L_B/4$ as shown in Figure 3. Joists may bear on the beam and extend past the beam centerline up to $L_J/4$ as shown in Figures 1A and 2, or the joists may attach to the side of the beam with joist hangers as shown in Figure 1B.

Joists shall not frame in from opposite sides of the same beam. See JOIST-TO-BEAM CONNECTION details, Figure 6.

Where multiple 2x members are used, the deck's beam is assembled by attaching the members identified in Table 3 in accordance with Figure 4. [Table R602.3(1)]

Table 2. Deck Beam Spans (L_B) [1]

Species	Size[4]	Joist Spans (L_J) Less Than or Equal to: 6′	8′	10′	12′	14′	16′	18′
Douglas Fir-Larch [2], Hem-Fir[2], SPF [2], Redwood, Western Cedars, Ponderosa Pine [3], Red Pine [3]	3x6 or 2-2x6	5′-5″	4′-8″	4′-2″	3′-10″	3′-6″	3′-1	2′-9″
	3x8 or 2-2x8	6′-10″	5′-11″	5′-4″	4′-10″	4′-6″	4′-1″	3′-8″
	3x10 or 2-2x10	8′-4″	7′-3″	6′-6″	5′-11″	5′-6″	5′-1″	4′-8″
	3x12 or 2-2x12	9′-8″	8′-5″	7′-6″	6′-10″	6′-4″	5′-11″	5′-7″
	4x6	6′-5″	5′-6″	4′-11″	4′-6″	4′-2″	3′-11″	3′-8″
	4x8	8′-5″	7′-3″	6′-6″	5′-11″	5′-6″	5′-2″	4′-10″
	4x10	9′-11″	8′-7″	7′-8″	7′-0″	6′-6″	6′-1″	5′-8″
	4x12	11′-5″	9′-11″	8′-10″	8′-1″	7′-6″	7′-0″	6′-7″
	3-2x6	7′-4″	6′-8″	6′-0″	5′-6″	5′-1″	4′-9″	4′-6″
	3-2x8	9′-8″	8′-6″	7′-7″	6′-11″	6′-5″	6′-0″	5′-8″
	3-2x10	12′-0″	10′-5″	9′-4″	8′-6″	7′-10″	7′-4″	6′-11″
	3-2x12	13′-11″	12′-1″	10′-9″	9′-10″	9′-1″	8′-6″	8′-1″

1. Assumes 40 psf live load, 10 psf dead load, L/360 simple span beam deflection limit, L/180 cantilever deflection limit, No. 2 grade, and wet service conditions.
2. Incising assumed for refractory species including Douglas fir-larch, hem-fir, and spruce-pine-fir.
3. Design values based on northern species with no incising assumed.
4. Beam depth must be equal to or greater than joist depth if joist hangers are used (see Figure 6, Option 3).

Figure 3. Beam Span Types

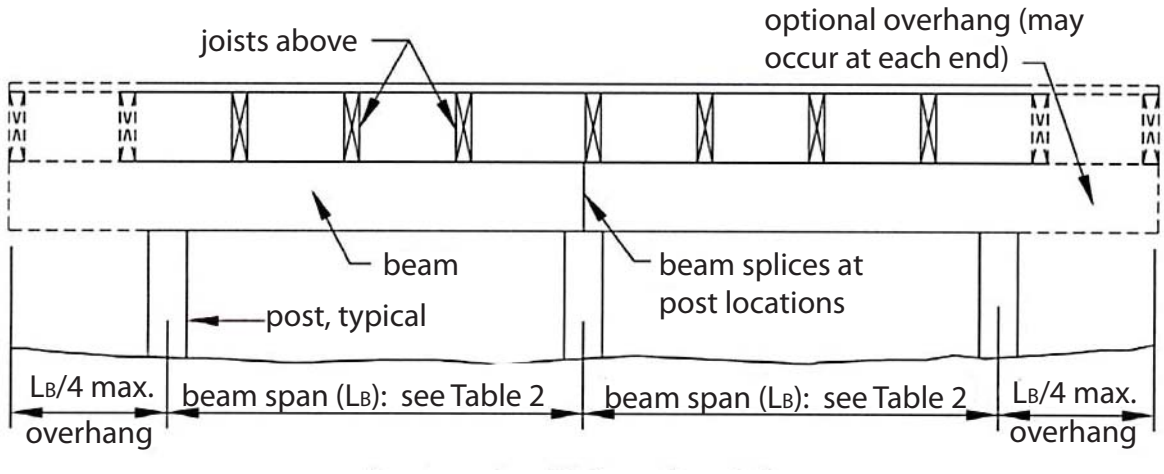

Figure 4. Beam Assembly Details

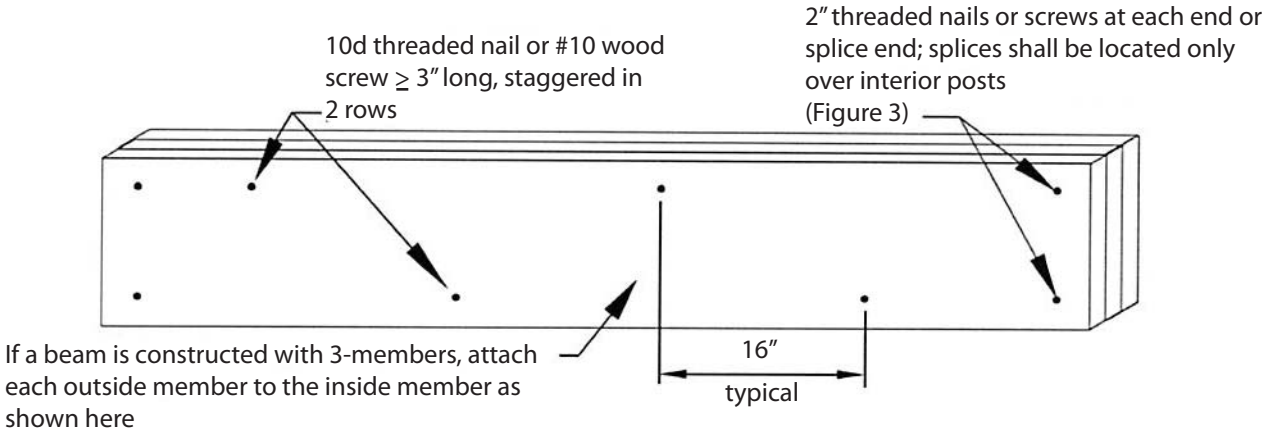

DECK FRAMING PLAN

A framing plan shows the joist and beam layout; the location of the ledger board, posts, and footings, and the type, size, and spacing of the ledger board fasteners. See Figure 5 for an example of a typical deck framing plan.

Figure 5. Typical Deck Framing Plan

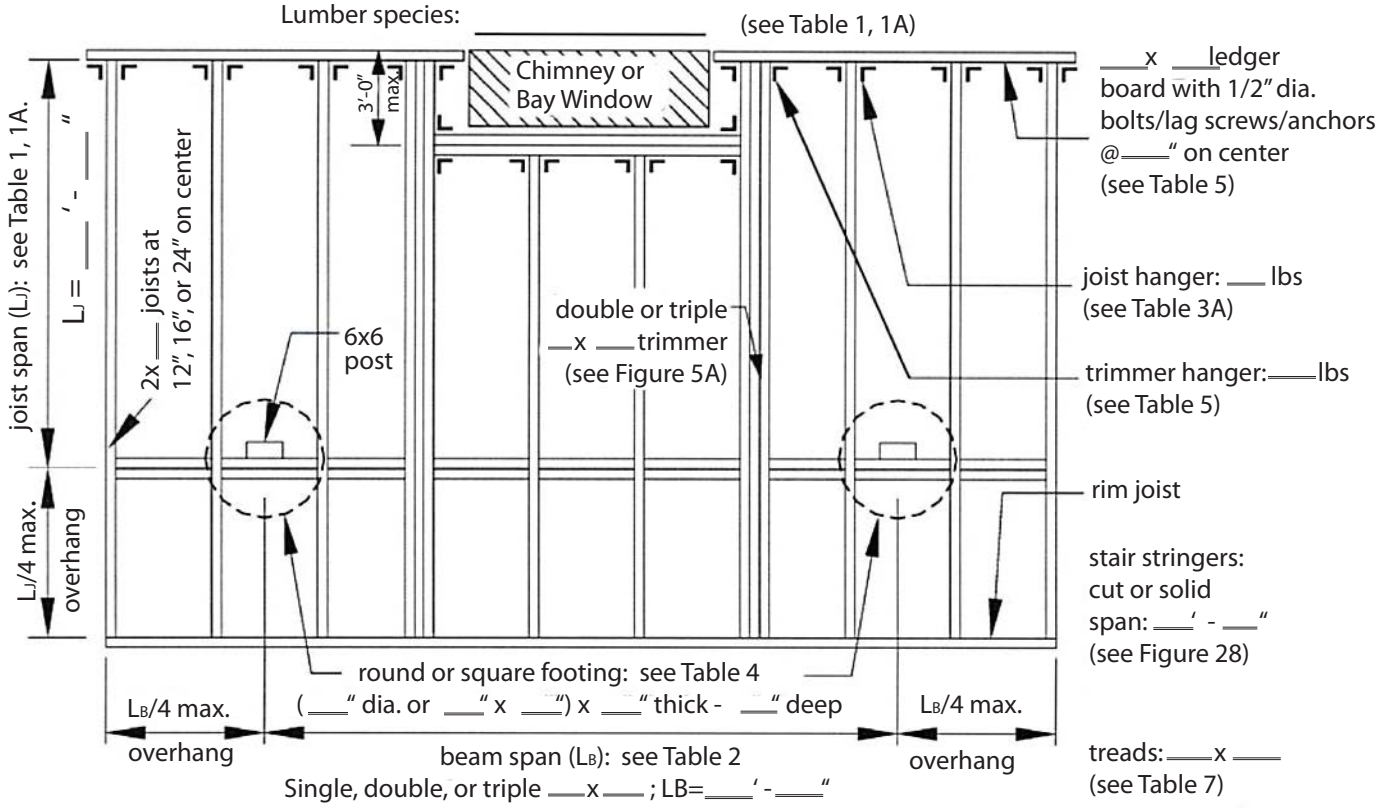

Figure 5A. Detail for Framing Around a Chiminey or Bay Window

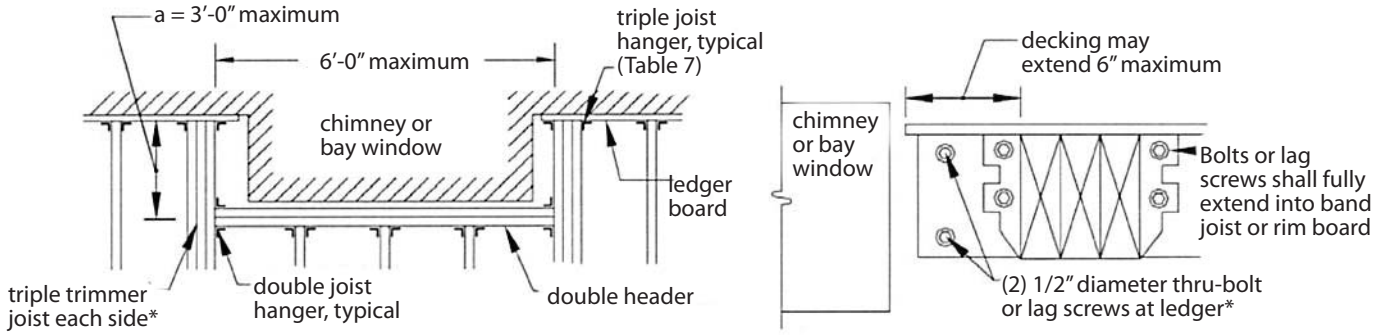

*Trimmer joist may be double if joists are spaced 24" o.c. or if trimmer length is 8'-6" or less

*See Figure 19 for fastener spacing, edge, and end distances

JOIST-TO-BEAM CONNECTION

Each joist shall be attached to the beam as shown in Figure 6. Joists may bear on and overhang past the beam a maximum of $L_J/4$. Use Option 1 or Option 2 to attach the joist to the beam. Option 1 shall only be used if the deck is attached to the house with a ledger (see LEDGER ATTACHMENT REQUIREMENTS) or as shown in Figure 23. Mechanical fasteners or hurricane clips used as shown in Option 2 must have a minimum capacity of 100 lbs in both uplift and lateral load directions. Joists may also attach to the side of the beam with joist hangers per Option 3. Joists shall not frame in from opposite sides of the same beam. See JOIST HANGERS for more information. Hangers. clips, and mechanical fasteners shall be galvanized or stainless steel (see MINIMUM REQUIREMENTS).

Figure 6. Joist-to-Beam Detail

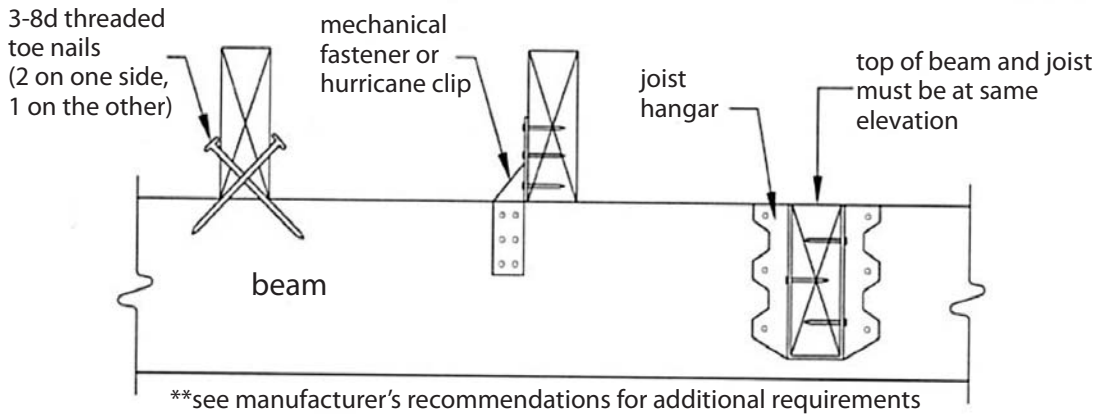

JOIST HANGERS

Joist hangers, as shown in Figure 7, shall each have a minimum download capacity in accordance with Table 3A. The joist hanger shall be selected from an approved manufacturer's product data based on the dimensions of the joist or header it is carrying. Joist hangers shall be galvanized or stainless steel (see MINIMUM REQUIREMENTS).

Use joist hangers with inside flanges when clearances to the edge of the beam or ledger board dictate. **Do not use clip angles or brackets to support joists**.

Figure 3A. Joist Hanger Download Capacity

Joist Size	Minimum Capacity, lbs
2x8	600
2x10	700
2x12	800

Figure 7. Typical Joist Hangers

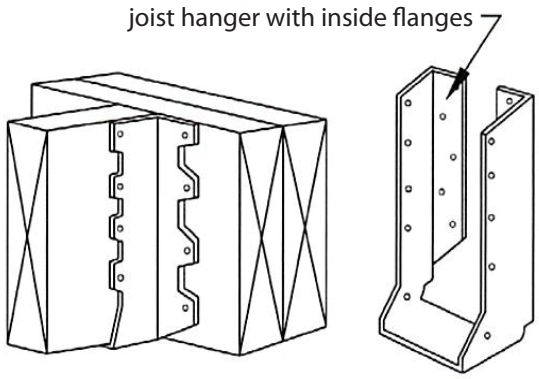

POST REQUIREMENTS

All deck post sizes shall be 6x6 (nominal) or larger and the maximum height shall be 14'-0" measured to the underside of the beam. 4x4 posts are permitted but shall not exceed 48" (inches) in height. Posts shall be centered on footings. Cut ends of pressure treated posts shall be field treated with an approved preservative (such as copper naphthenate) [R402.1.2]. The beam shall be attached to the post by notching the 6x6 as shown in Figure 8 or by providing an approved post cap to connect the beam and post as shown in Figure 10. All 3-ply beams shall be connected to the post by a post cap. All posts shall provide full bearing for beams. All thru-bolts shall have washers under the bolt head and nut. Attachment of the beam to the side of the post without notching is prohibited (see Figure 9). All posts shall provide full bearing for beams.

Figure 8. Post-to-Beam Attachment Requirements

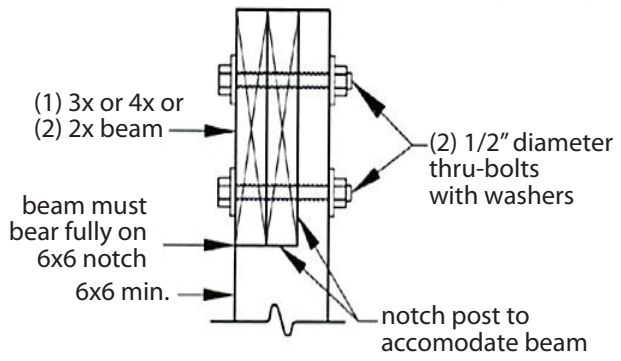

Figure 9. Prohibited Post-to-Beam Attachment

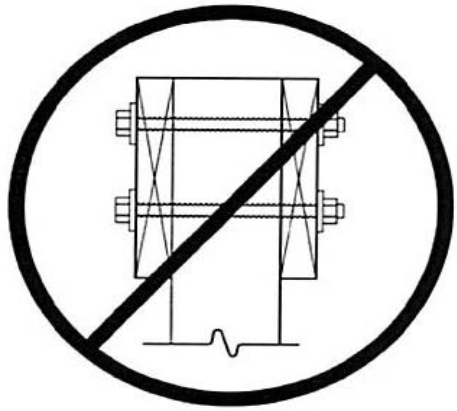

Figure 10. Alternate Approved Post-to-Beam Post Cap Attachment

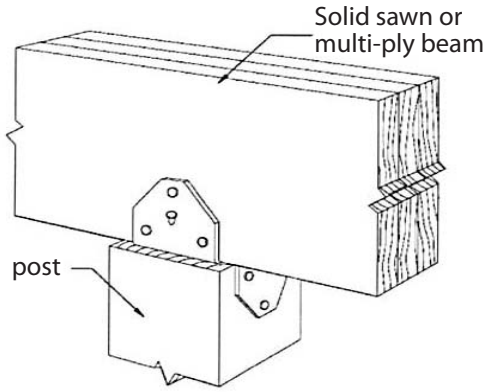

RIM JOIST REQUIREMENTS

Attach a continuous rim joist to the ends of joists as shown in Figure 11. Attach decking to the rim joist as shown in Figure 11. For more decking attachment requirements, see DECKING REQUIREMENTS.

Figure 11. Rim Joist Connection Details

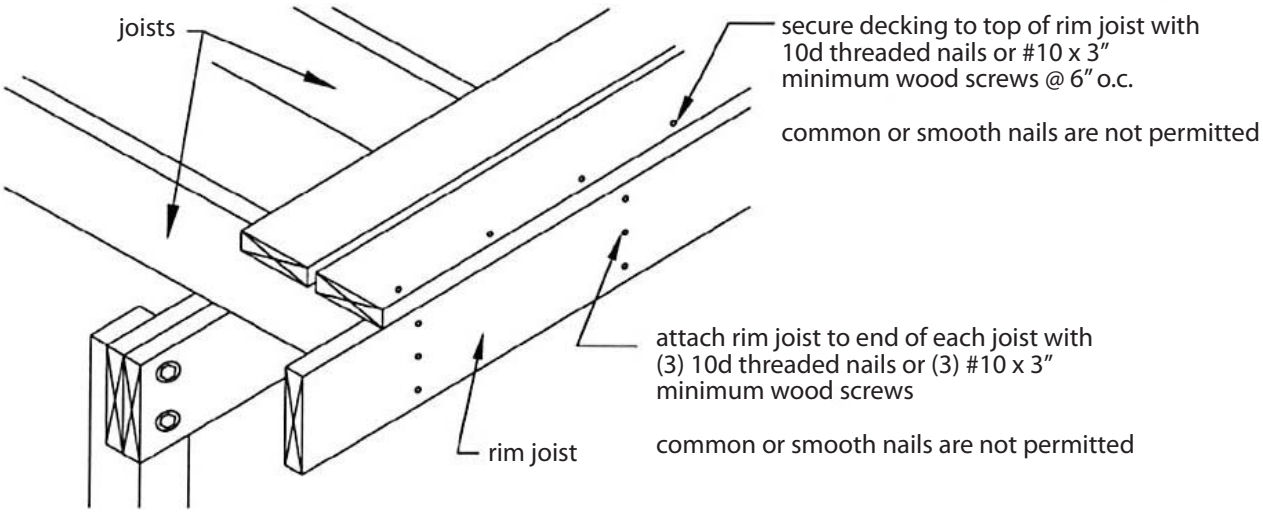

FOOTINGS [R403]

See Figure 12 and Table 4 for footing size, footing thickness, and post attachment options and requirements.
All footings shall bear on solid ground and shall be placed at least 12 inches below the undisturbed ground surface or below the frost line, whichever is deeper.
Contact the authority having jurisdiction to determine the specified frost line. Bearing conditions shall be verified in the field by the building official prior to placement of concrete. Where the building official determines that in-place soils with an allowable bearing capacity of less than 1,500 psf are likely to be present at the site, the allowable bearing capacity shall be determined by a soils investigation. DECK FOOTINGS CLOSER THAN 5'-0" TO AN EXISTING EXTERIOR HOUSE WALL MUST BEAR AT THE SAME ELEVATIONS AS THE FOOTING OF THE EXISTING HOUSE FOUNDATION.

Do not construct footings over utility lines or enclosed meters. Contact local utilities (call 811) befor digging.

Pre-manufactured post anchors shall be galvanized. See MINIMUM REQUIREMENTS.

Table 4. Footing Sizes[1]

Beam Span, L_B	Joist Span, L_J	Round Footing Diameter	Square Footing Dimension	Footing Thickness[2]
6'	≤10'	15"	13"	6"
	≤14'	17"	15"	6"
	≤18'	20"	18"	7"
8'	≤10'	17"	15"	6"
	≤14'	20"	18"	8"
	≤18'	23"	21"	9"
10'	≤10'	19"	17"	7"
	≤14'	22"	20"	9"
	≤18'	25"	23"	10"
12'	≤10'	21"	19"	8"
	≤14'	24"	22"	10"
	≤18'	28"	26"	11"
14'	≤10'	22"	20"	9"
	≤14'	26"	24"	11"
	≤18'	30"	28"	12"
16'	≤10'	24"	22"	9"
	≤14'	28"	26"	12"
	≤18'	32"	30"	13"
18'	≤10'	25"	23"	10"
	≤14'	30"	28"	12"
	≤18'	34"	32"	14"

1 Assumes 1,500 psf soil bearing capacity.
2 Assumes 2.500 psi compressive strength of concrete. Coordinate footing thickness with post base and anchor requirements.

Figure 12. Typical Footing Options

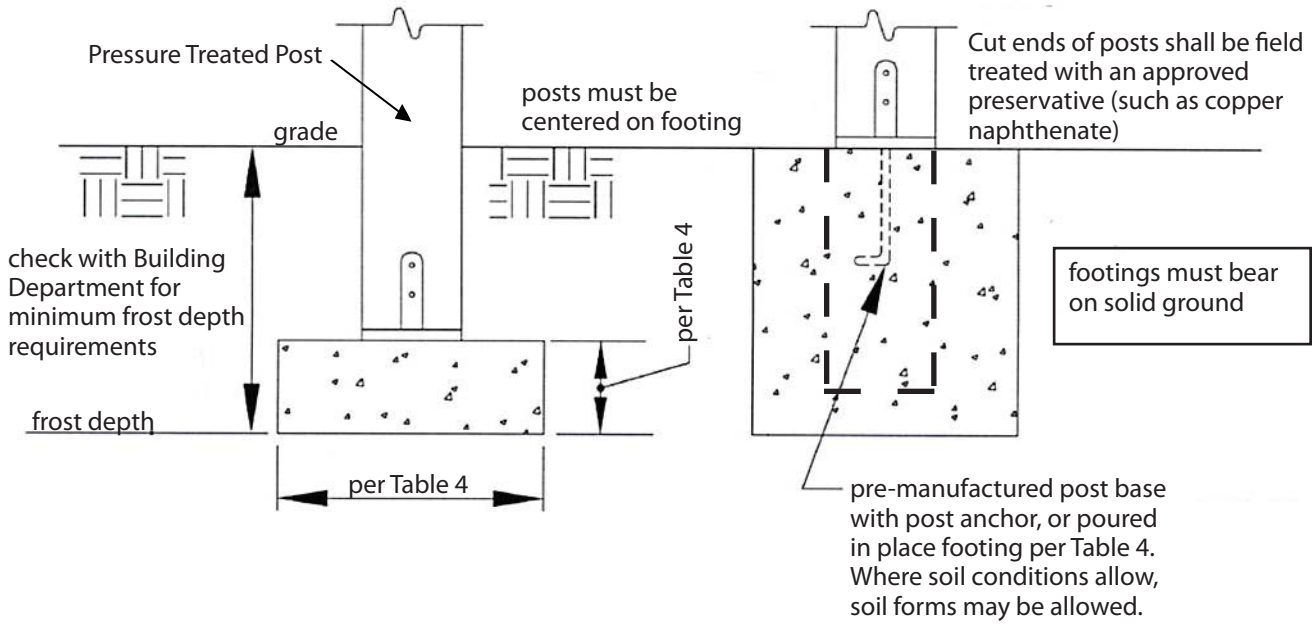

LEDGER ATTACHMENT REQUIREMENTS [R502.2.2]

GENERAL: L**edger boards shall be pressure treated material**. Attach the ledger board, which shall be equal to or greater than the deck joist depth but less than or equal to the rim joist depth, to the existing exterior wall in accordance with Figure 14 through Figure 16. When attachments are made to the existing house band joist, the band joist shall be capable of supporting the new deck. If this cannot be verified or conditions at the existing house differ from the details herein, then either a free-standing deck or full plan submission is required. See FREE-STANDING DECKS.

SIDING AND FLASHING: House siding or the exterior finish system must be removed prior to installation of the ledger board. Approved corrosion resistant flashing is required at any ledger board connection to a wall of wood framed construction (see MINIMUM REQUIREMENTS). See Figure 14 for continuous flashing with drip edge. The threshold shall be carefully flashed and caulked to prevent water intrusion due to splash from the deck or melting snow and ice.

MANUFACTURED WOOD I-JOIST: The term "I-Joist" denotes manufactured wood "I" joists (see Figure 13A). Many new homes constructed with wood I-joists include 1" or thicker engineered wood products (EWP)such as oriented strand board (OSB) or structural composite lumber (SCL) including laminated veneer lumber (LVL) - as band joists (or rim boards) that can support the attachment of a deck (see Figure 14). However, some older homes might be constructed with band boards that are too thin (less than 1 ") to support a deck. In such cases, a free-standing deck or a full plan submission is required.

MANUFACTURED WOOD TRUSS: A metal plate connected wood truss (MPCWT) is an engineered, prefabricated structural component designed for each specific application. MPCWT's used in residential floors are often installed with a 2x4 lumber "ribbon" at the ends of the trusses (see Figure 13B) to tie the ends of the trusses together. The ribbon board, by itself, is not intended to support the deck ledger and deck. Installing residential decks when the floor system for the house uses MPCWT requires a standard detail provided by the truss designer, a free-standing deck, or a full plan submission. Refer to the WTCA Technical Note - *Attachment of Residential Decks to Wood Truss Floor Systems* for special blocking details and attachment requirements (www.sbcindustry.com) .

Figure 13A. Wood I-Joist Profile

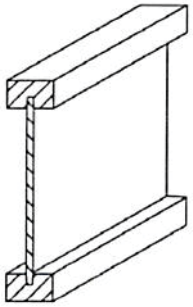

Figure 13B. Metal Plate Connected (MPC) Wood Floor Trusses with a 2x4 Lumber "Ribbon" at the ends of the Trusses

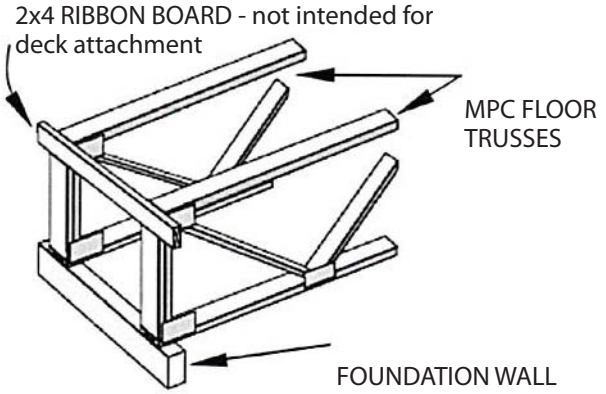

FRAMING AT CHIMNEY OR BAY WINDOW

All members at a chimney or bay window shall be framed in accordance with Figure 5. Headers may span a maximum of 6'- 0". When a chimney or bay window is wider thant 6'-0", one or more 6x6 posts may be added to reduce header spans to less than 6'-0". In such cases, the post footing must meet the requirements in the FOOTINGS section. Headers with a span length greater than 6'-0" require a plan submission. Headers shall be located no more than 3'-0" from the end of the trimmer joist.

Triple trimmer joists are required on each side of the header if joist spacing is 12" or 16" o.c. or if the trimmer joist span exceeds 8'-6"; otherwise, double trimmer joists are permitted. Trimmer joists may bear on the beam and extend past the beam centerline up to $L_J/4$ as shown in Figures 1A and 2, or the trimmer joist may attach to the side of the beam with joist hangers as shown in Figure 1B. Joist hangers shall each have a minimum download capacity in accordance with Table 5. Bolts or lag screws used to attach the hanger to the ledger shall fully extend through the ledger into the 2-inch nominal lumber band joist (1-1/2" actual) or EWP rim board. Otherwise a freestanding deck is required.

Table 5. Trimmer Joist Hanger Download Capacity

Joist Size	Minimum Capacity, lbs
2x8	1050
2x10	1380
2x12	1500

Figure 14. General Attachment of Ledger Board to Band Joist or Rim Board

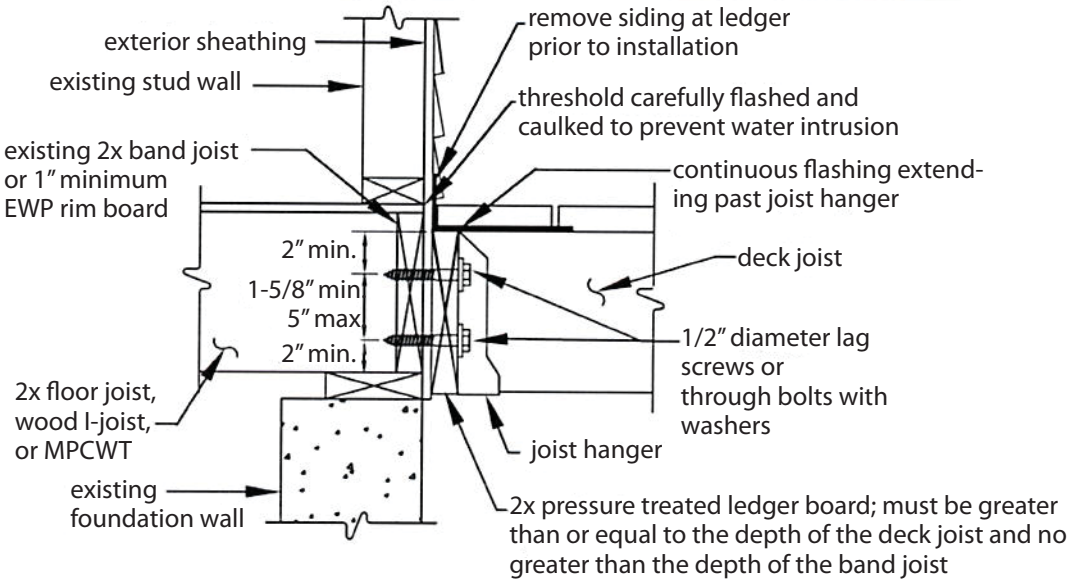

Figure 15. Attachment of Ledger Board to Foundation Wall (Concrete or Solid Masonry)

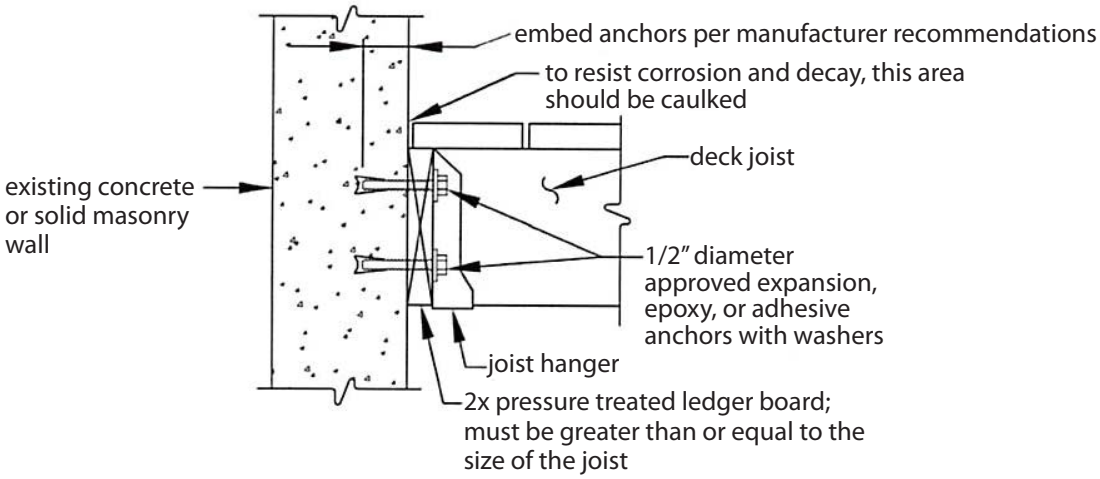

Figure 16. Attachment of Ledger Board to Foundation Wall (Hollow Masonry)

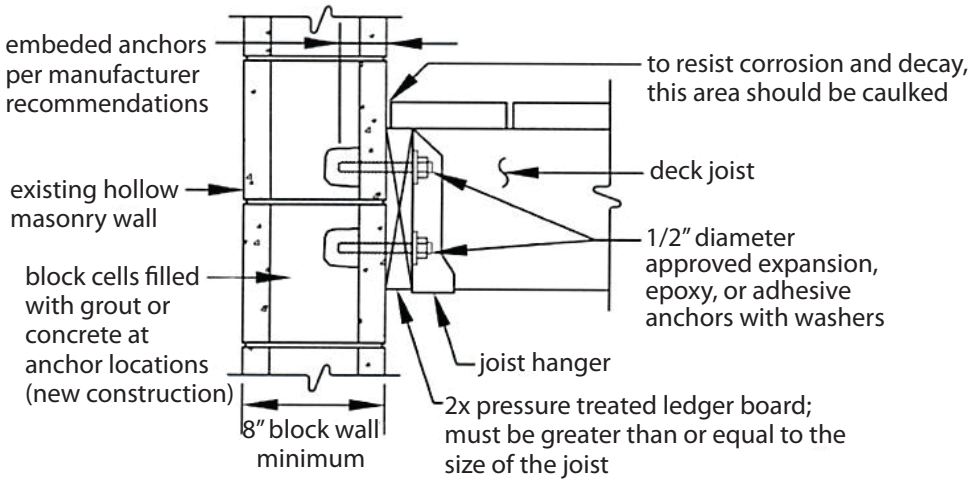

PROHIBITED LEDGER ATTACHMENTS

Attachments to exterior veneers (brick, masonry, stone) and to cantilevered floor overhangs or bay windows are prohibited (see Figures 17 and 18). In such cases the deck shall be free-standing (see FREE-STANDING DECKS).

Figure 17. No Attachment to or Through Exterior Veneers (Brick, Masonry, Stone)

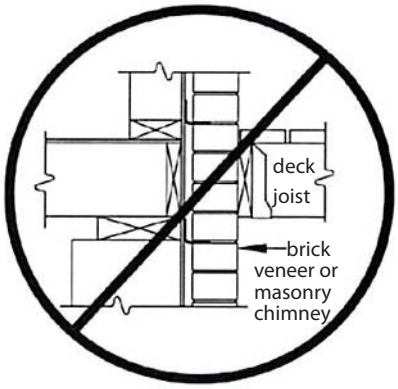

Figure 18. No Attachment to House Overhang

LEDGER BOARD FASTENERS

Only those fasteners noted below are permitted. LEAD ANCHORS ARE PROHIBITED.

Deck ledger connection to band joist or rim board. The connection between a deck ledger and a 2-inch nominal lumber band joist (1-1/2″ actual) or EWP rim board bearing on a sill plate or wall plate shall be constructed with 1/2″ lag screws or bolts with washers per Table 6 and Figure 19 (see MINIMUM REQUIREMENTS).

Table 6. Fastener Spacing for a Southern Pine, Douglas Fir-Larch, or Hem-Fir Deck Ledger and a 2-inch Nominal Soli-Sawn Spruce-Pine-Fir[7,9] Band Joist or EWP Rim Board[6]
(Deck Live Load = 40 psf, Deck Dead Load = 10 psf)[3,6]

Joist Span	Rim Board or Band Joist	6′- 0″ and less	6′-1″ to 8′ - 0″	8′ - 1″ to 10′ - 0″	10′ - 1″ to 12′ - 0″	12′ - 1″ to 14′ - 0″	14; - 1″ to 16′ - 0″	16′ - 1″ to 18′ - 0″
Connection Details	**On-Center Spacing of Fasteners[4,5]**							
1/2″ diameter screw with 15/32″ maximum sheathing[1]	1″ EWP[6] 1-1/8″ EWP[6] 1-1/2″ Lumber[7,9]	24″ 28″ 30″	18″ 21″ 23″	14″ 16″ 18″	12″ 14″ 15″	10″ 12″ 13″	9″ 10″ 11″	8″ 9″ 10″
1/2″ diameter bolt with 15/32″ maximum sheathing	1″ EWP[6] 1-1/8″ EWP[6] 1-1/2″ Lumber[7,9]	24″ 28″ 36″	18″ 21″ 36″	14″ 16″ 34″	12″ 14″ 29″	10″ 12″ 24″	9″ 10″ 21″	8″ 9″ 19″
1/2″ diameter bolt with 15/32″ maximum sheathing and 1/2″ stacked washers[2,8]	1″ EWP[6] 1-1/8″ EWP[6] 1-1/2″ Lumber[7,9]	24″ 28″ 36″	18″ 21″ 36″	14″ 16″ 29″	12″ 14″ 24″	10″ 12″ 21″	9″ 10″ 18″	8″ 9″ 16″

1 The tip of the lag screw shall fully extend beyond the inside face of the band joist.
2 The maximum gap between the face of the ledger board and face of the wall sheathing shall be 1/2″.
3 Ledgers shall be flashed our caulked to prevent water from contacting the house band joist (see Figure 14, 15, and 16).
4 Lag screws and bolts shall be staggered per Figure 19.
5 Deck ledgers shall be minimum 2x8 pressure-preservative-treated No. 2 grade lumber, or other approved materials as established by standard engineering practice.
6 When solid-sawn pressure-preservative-treated deck ledgers are attached to engineered wood products (minimum 1″ thick wood structural panel band joist or structural composite lumber including laminated veneer lumber), the ledger attachment shall be designed in accordance with accepted engineering practice. Tabulated values based on 300 lbs and 350 lbs for 1″ and 1-1/8″ EWP rim board, respectively.
7 A minimum 1″x9 1/2″ Douglas fir-larch laminated veneer lumber rim board shall be permitted in lieu of the 2″ nominal band joist.
8 Wood structural panel sheathing, gypsum board sheathing, or foam sheathing not exceeding one inch thickness shall be permitted. The maximum distance between the face of the ledger board and the face of the band joist shall be one inch.
9 Fastener spacing also applies to Douglas fir-larch, and hem-fir band joists.

Placement of lag screws or bolts in deck ledgers
The lag screws or bolts shall be placed as shown in Figure 19. The lag screws or bolts shall be staggered from the top to the bottom along the horizontal run of the deck ledger (see Figure 19). Proper installation of lag screws or bolts shall be verified by the authority having jurisdiction.

Figure 19. Ledger Board Fastener Spacing and Clearances

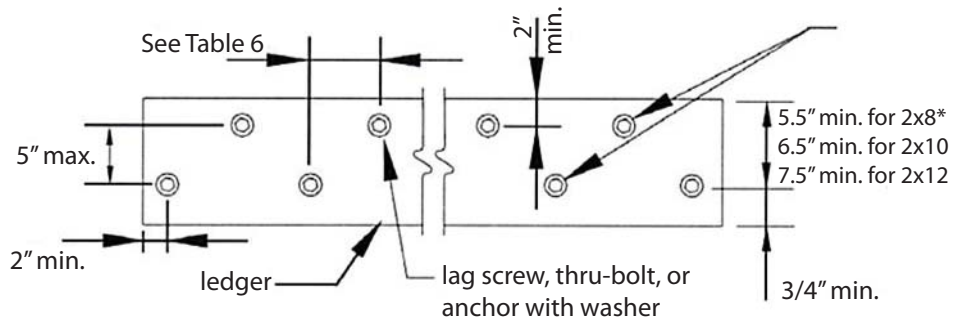

See Figure 14 for rim joist fastener spacing

*Distance can be reduced to 4.5″ if lag screws are used or bolt spacing is reduced to that of lag screws to attach 2x8 ledgers to 2x8 band joists (1/2″ stacked washers not permitted).

Thru-Bolts
Thru-bolts shall have a diameter of 1/2″. Pilot holes for thru-bolts shall be 17/32″ to 9/16″ in diameter. Thru-bolts require washers at the bolt head and nut.

Expansion and Adhesive Anchors
Use approved expansion or adhesive anchors when attaching a ledger board to a concrete or solid masonry wall as shown in Figure 15 or a hollow masonry wall with a grouted cell as shown in Figure 16. Expansion and adhesive anchor bolts shall have a diameter of 1/2″.

Minimum spacing and embedment length shall be per the manufacturer's recommendations. All anchors must have washers.

Lag Screws
Lag screws shall have a diameter of 1/2″ (see MINIMUM REQUIREMENTS). Lag screws may be used only when the field conditions conform to those shown in Figure 14. See Figure 20 for lag screw length and shank requirements. All lag screws shall be installed with washers.

Figure 20. Lag Screw Requirements

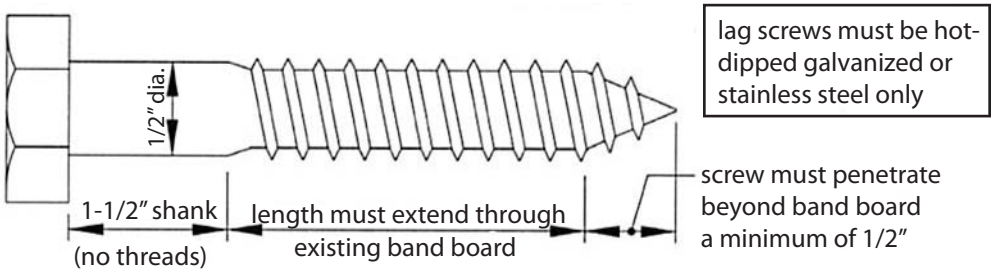

Lag screw installation requirements:
Each lag screw shall have pilot holes drilled as follows: 1) Drill a 1/2″ diameter hole in the ledger board, 2) Drill a 5/16″ diameter hole into the band board of the existing house. DO NOT DRILL A 1/2″ DIAMETER HOLE INTO THE BAND BOARD.

The treaded portion of the lag screw shall be inserted into the pilot hole by turning. DO NOT DRIVE LAG SCREWS WITH A HAMMER. Use soap or a wood compatible lubricant as required to facilitate tightening. Each lag screw shall be thoroughly tightened (snug but not over-tightened to avoid wood damage).

FREE STANDING DECKS

Decks which are free-standing do not utilize the exterior wall of the existing house to support vertical loads (see Figure 21); instead, an additional beam with posts is provided at or within L/4 of the existing house. THE ASSOCIATED DECK POST FOOTINGS HALL BE PLACED AT THE SAME ELEVATION AS THE EXISTING HOUSE FOOTING IF LOCATED CLOSER THAN 5′ - 0″ TO AN EXISTING HOUSE WALL (see Figure 2 and Figure 12). For houses with basements, a cylindrical footing (caisson) is recommended to minimize required excavation at the basement wall. Beam size is determined by Table 2.

Figure 21. Free Standing Deck

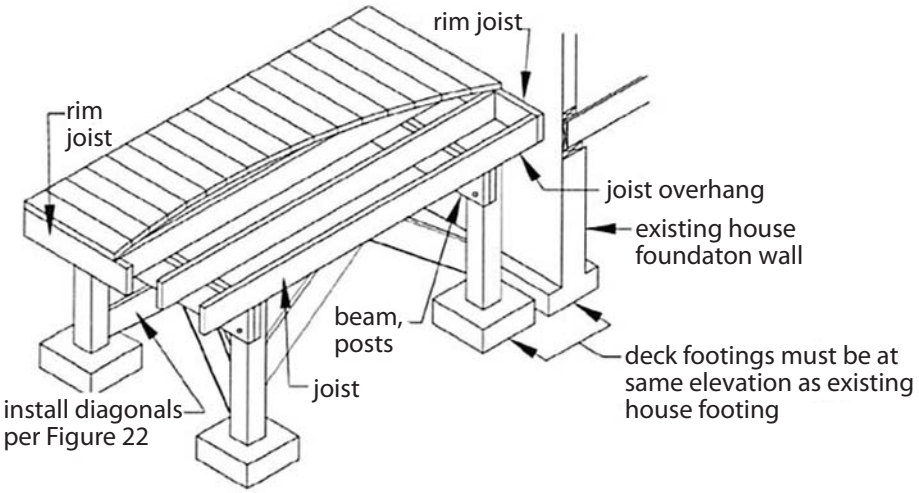

DECK STABILITY

Decks greater than 4 feet above grade shall be provided with diagonal bracing.

Figure 22. Diagonal Bracing Requirements

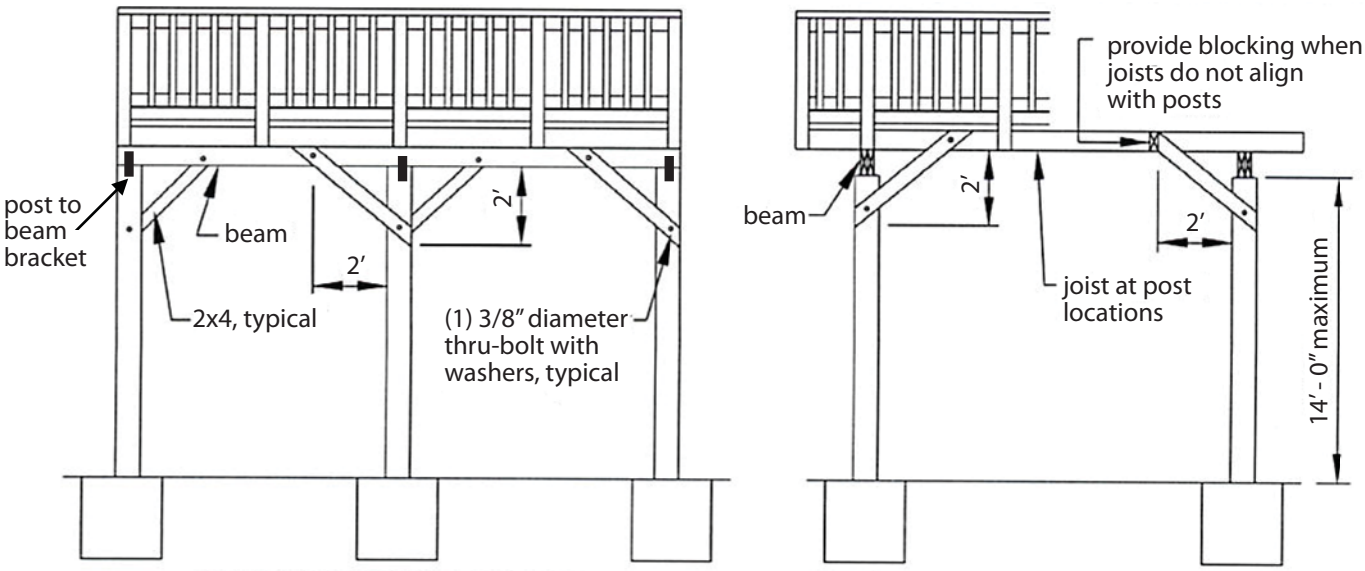

Diagonal Bracing: Provide diagonal bracing both parallel and perpendicular to the beam at each post as shown in Figure 22. When parallel to the beam, the bracing shall be bolted to the post at one end and beam at the other. When perpendicular to the beam, the bracing shall be bolted to the post at one end and a joist or blocking between joists at the other. When a joist does not align with the bracing location provide blocking between the adjacent joists. Decks attached to the house as shown in Figure 23A do not require diagonal bracing perpendicular to the house. Diagonal bracing parallel to the house may be omitted at the beam adjacent to the house for a free-standing deck attached as shown in Figure 23.

Free-standing Deck - Attachment to House: Attach the deck rim joist to the existing house exterior wall as shown in Figure 23 for a free-standing deck. The wall must be sheathed with minimum 3/8" wood structural panel sheathing. Use lag screws or thru-bolts when fastening to an existing band joist or wall stud; use expansion anchors or epoxy anchors when fastening to concrete or masonry. DO NOT ATTACH TO BRICK VENEERS. VERIFY THIS CONDITION IN THE FIELD PRIOR TO UTILIZING THIS METHOD. Fasteners shall be 16" on center and staggered in 2 rows for free-standing decks. Flashing over the rim joist is required and must be installed in accordance with the flashing provisions in the LEDGER ATTACHMENT REQUIREMENTS.

Deck Supported by Ledger - Attachment to House: Where supported by attachment to an exterior wall (Figures 14, 15, or 16), decks shall be positively anchored to the primary structure and designed for both vertical and lateral loads as applicable [R502.2.2]. The lateral load connection required shall be permitted to be in accordance with Figure 23A. Hold down tension devices shall be provided in not less than two locations per deck, and each device shall have an allowable stress design capacity of not less than 1,500 lb [R502.2.2.3].

Figure 23. Attachment of Free-Standing Deck to House for Deck Stability

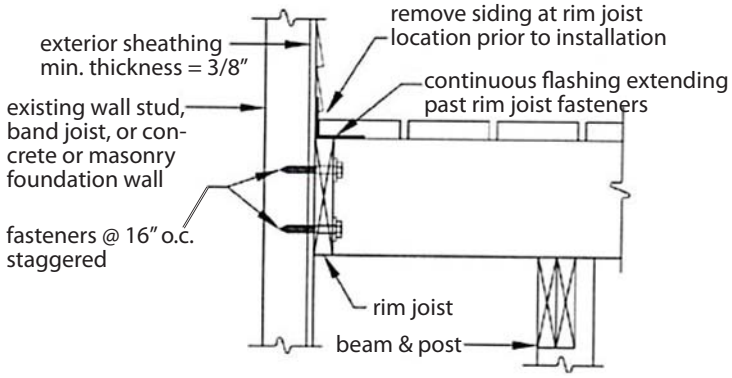

Figure 23A. Example of a Lateral Load Device for a Deck Attached to a House with a Ledger

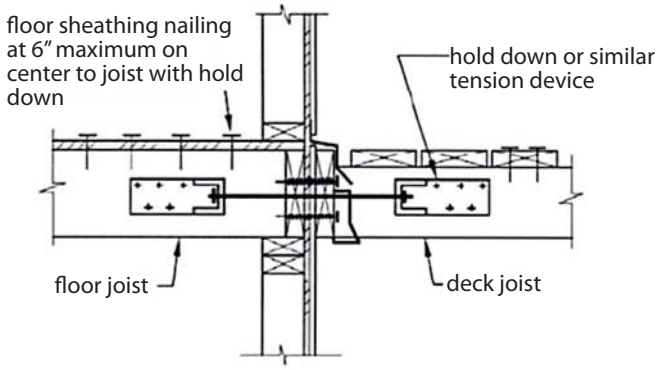

GUARD REQUIREMENTS

All decks greater than 30" above grade are required to have a guard [R312.1] - one example is shown in Figure 24. Other methods and materials may be used for guard construction when installed according to the manufacturers installation instruction, or as approved by the authority having jurisdiction. Where a guard is required and fixed seating is provided the guard height is measured from the top of the fixed seating.

Figure 24. Example Guard Detail - Best Practice

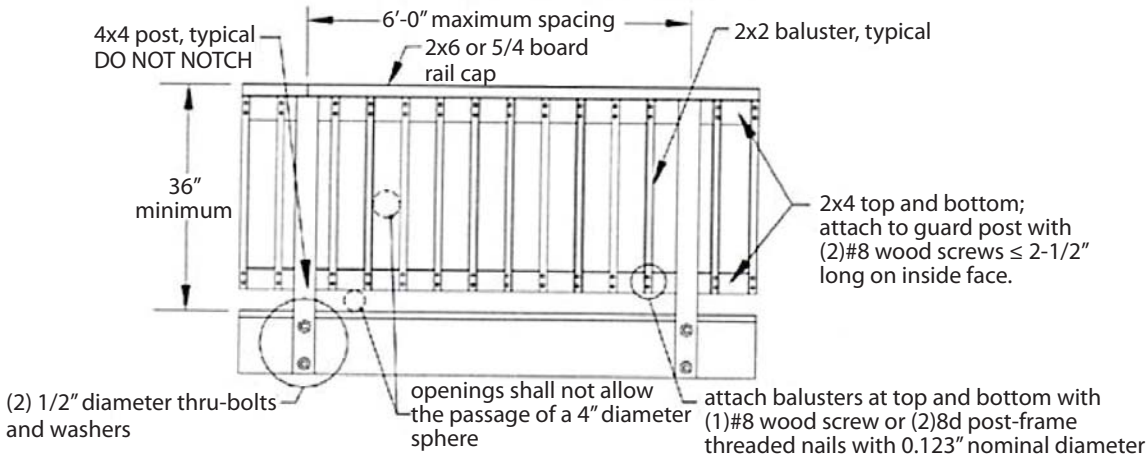

GUARD POST ATTACHMENTS

Deck guard posts shall be a minimum 4x4 (nominal) with an adjusted bending design value not less than 1,100 psi.

Guard posts for guards which run parallel to the deck joists shall be attached to the outside joist per Figure 25. Guard posts for guards that run perpendicular to the deck joists shall be attached to the rim joist in accordance with Figure 26. Only hold down anchor models meeting these minimum requirements shall be used. Hold down anchors shall have a minimum allowable tension load of 1,800 pounds for a 36" maximum rail height and be installed in accordance with the manufacturer's instructions.

Figure 25. Guard Post to Outside Joist Example - Best Practice

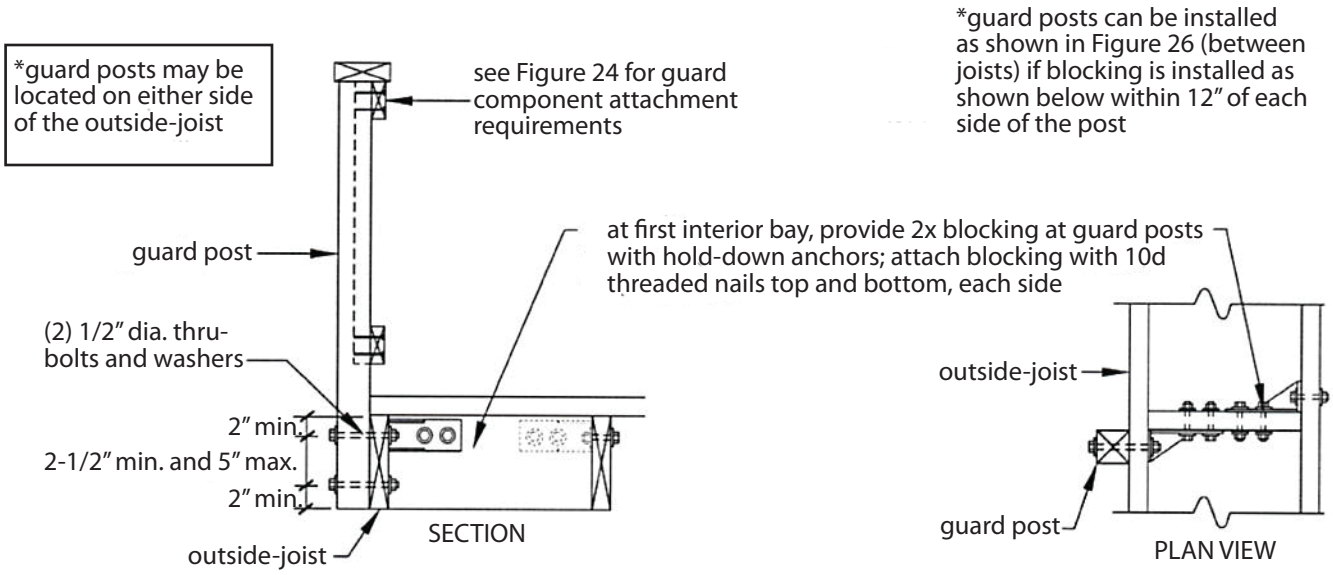

Figure 26. Guard Post to Rim Joist Example - Best Practice

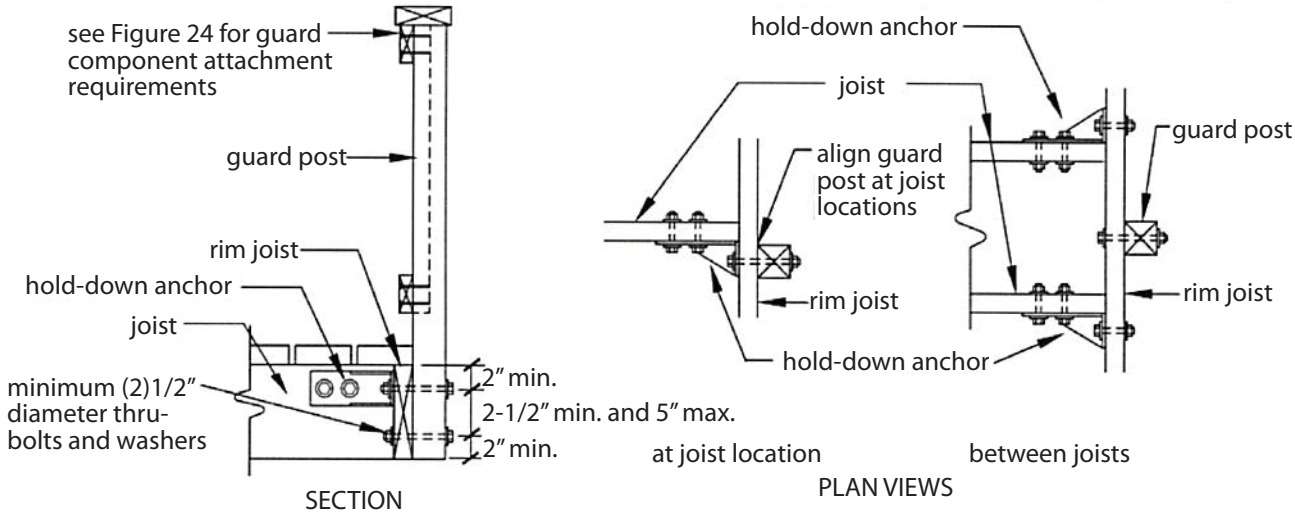

STAIR REQUIREMENTS

Stairs, stair stringers, and stair guards shall meet the requirements shown in Figure 27 through Figure 31 and Table 7 except where amended by the local jurisdiction. All cut stringers shall be a minimum of 2x12, and solid stringers shall be a minimum of 2x10. Stair stringers shall not span more than the dimensions shown in Figure 28. If the stringer span exceeds these dimensions, then a 4x4 post may be provided to support the stringer and shorten its span length. An intermediate landing may also be provided to shorten the stringer span (see provisions below). If the total vertical height of a stairway exceeds 12′-0″, then an intermediate landing shall be required. All intermediate stair landings must be designed and constructed as a free-standing deck using the details in this document. Stairs shall be a minimum of 36″ in width, a combination of cut and solid stringers can be used, but shall be placed at a maximum spacing of 18″ on center (see Figure 29). The width of each landing shall not be less than the width of the stairway served. Every landing shall have a minimum dimension of 36″ measured in the direction of travel and no less than the width of the stairway served [R311.7}.

Figure 27. Tread and Riser Detail

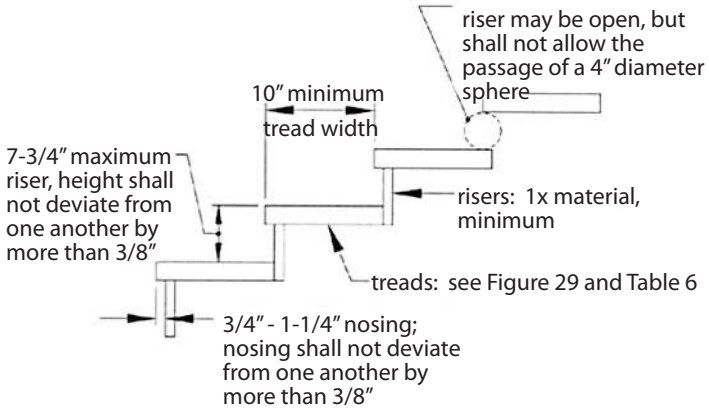

Figure 28. Stair Stringer Requirements

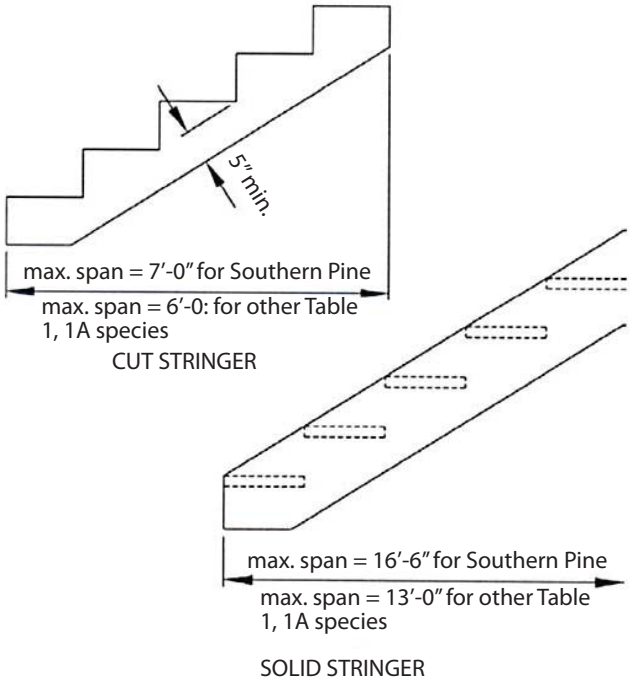

Figure 29. Tread Connection Requirements

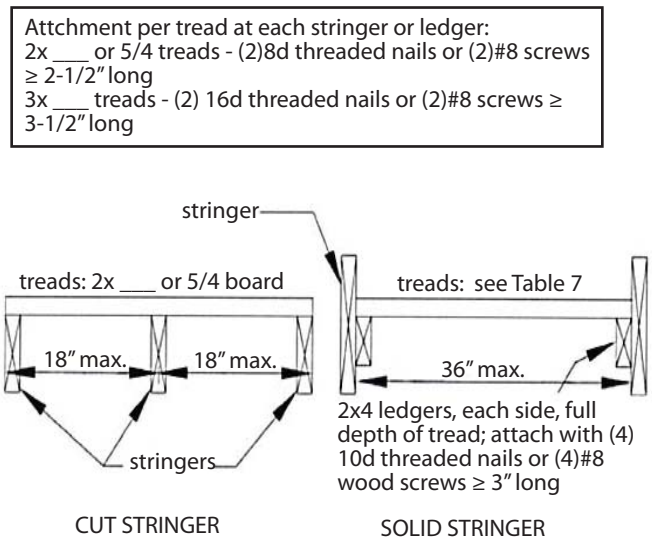

Table 7. Minimum Tread Size for Cut and Solid Stringers [1]

Species	Cut Stringer	Solid Stringer
Douglas Fir Larch, Hem-Fir, SPF[2]	2x4 or 5/4	2x6 or 3x4
Redwood, Western Cedars, Ponderosa Pine[3], Red Pine[3]	2x4 or 5/4	2x6 or 3x4

1 Assumes 300 lb concentrated load, L/288 deflection limit, No. 2 grade, and wet service conditions.

2 Incising assumed for refractory species including Douglas fir-larch, hem-fir, and spruce-pine-fir.

3 Design values based on northern species with no incising assumed.

Figure 30. Stair Guard Requirements

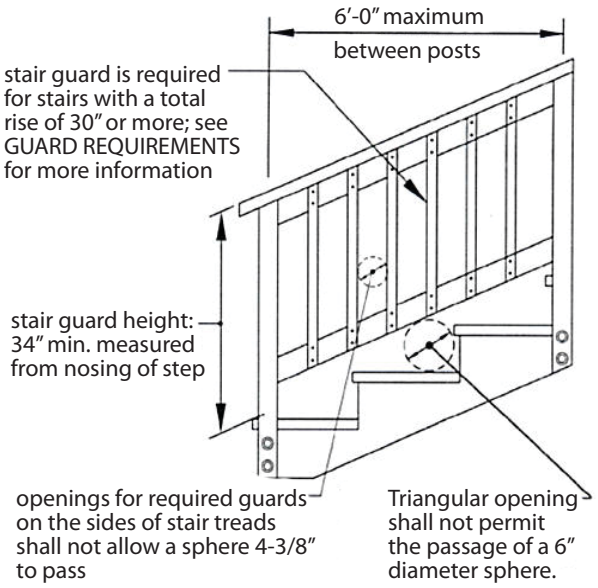

Figure 31. Stair Stringer Attachment Detail

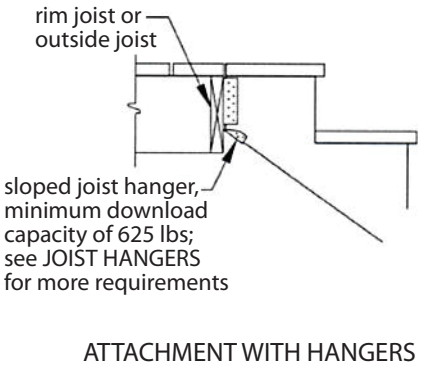

STAIR HANDRAIL REQUIREMENTS

All stairs with 4 or more risers shall have a handrail on at least one side (see Figure 32A) [R311.7.7]. The handrail height measured vertically from the sloped plane adjoining the tread nosing shall be not less than 34 inches and not more than 38 inches (see Figure 30) [R311.7.7.1]. Handrails shall be graspable and shall be composed of decay-resistant and/or corrosion resistant material. Handrails shall be Type I, Type II, or provide equivalent graspability (see Figure 32B). Type I shall have a perimeter dimension of at least 4″ and not greater than 6-1/4″. Type II rails with a perimeter greater than 6-1/4″ shall provide a graspable finger recess area on both smooth surface with no sharp corners. Handrails shall run continuously from a point directly over the lowest riser to a point directly over the highest rise and shall return to the guard at each end. Handrails may be interrupted by guard posts at a turn in the stair [R311.7.7.2].

Figure 32A. Handrail Mounting Examples

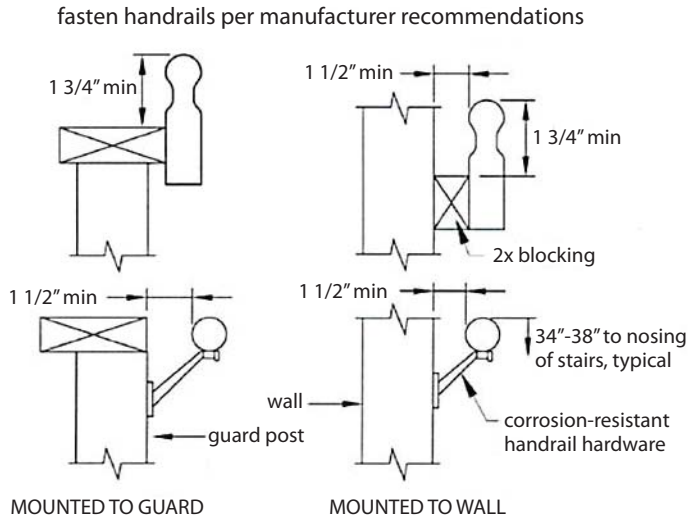

Figure 32B. Handrail Grip Size

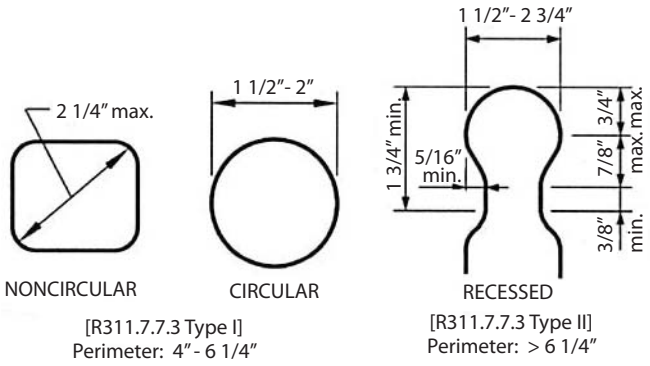

STAIR LIGHTING REQUIREMENTS [R303.6]

Stairways serving a required exit shall have a light source located at the top landing such that all stairs and landings are illuminated. The light switch shall be operated from inside the house. However, motion detected or times switches are acceptable.

Some of the text and images contained in this brochure have been extracted from various publications and are the courtesy of the International Code Council, and the American Wood Council. While every effort has been made to insure the accuracy of the information presented, jurisdictions as indicated on this brochure do not assume responsibility for errors and omissions in this document. Those using this document assume all liability arising from its use.

Please note that while every effort is made to assure the accuracy of the information contained in this brochure it is not warranted for accuracy. This document is not intended to address all aspects or regulatory requirements for a project and should serve as a starting point for your investigation. For detailed information on a particular project, permit, or code requirement refer directly to applicable file and/or code/regulatory documents or contact the appropriate division or staff.

BP-68 10/11