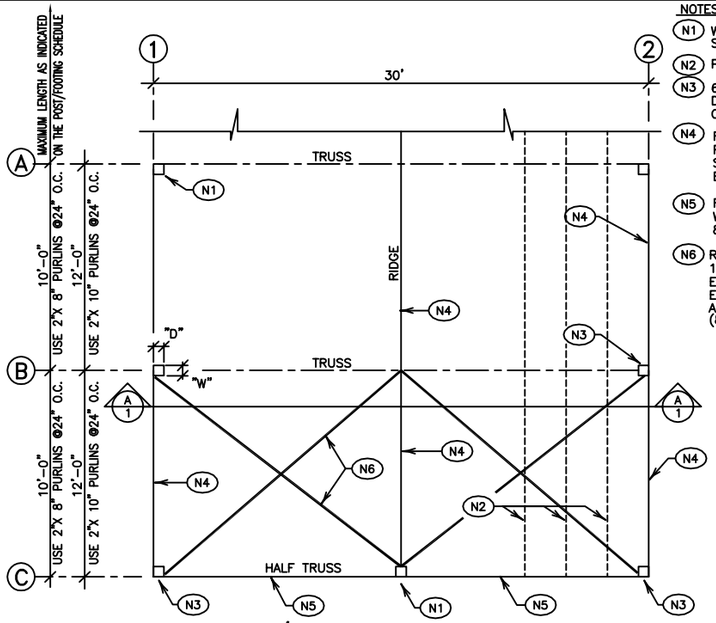

FLOOR PLAN/ROOF FRAMING PLAN

NOT TO SCALE

NOTES FOR FLOOR PLAN

- (N1) WOOD POSTS, SEE POST/FOOTING SCHEDULE, THIS SHEET.
- (N2) PURLINS @2'-0" O.C.
- (N3) 6 X 6 WOOD CORNER POSTS WITH 2'-0" DIAMETER X 3'-0" DEEP FOOTINGS, UNLESS OTHERWISE INDICATED.
- (N4) FASTEN METAL TO RIDGE AND EAVE PURLINS WITH #10 X 1-1/2" SCREWS ON ONE SIDE OF EACH MAJOR RIB.
- (N5) FASTEN METAL TO GABLE END TRUSS WITH #10 X 1-1/2" SCREWS AT 8" ON CENTER.
- (N6) ROOF BRACES: INSTALL 1-1/4" 16 GA. 36 KSI STEEL BANDING AT END BAYS ONLY. FASTEN EACH END OF EACH BAND TO POLES AND TRUSS RIDGES WITH (8) 10D NAILS.

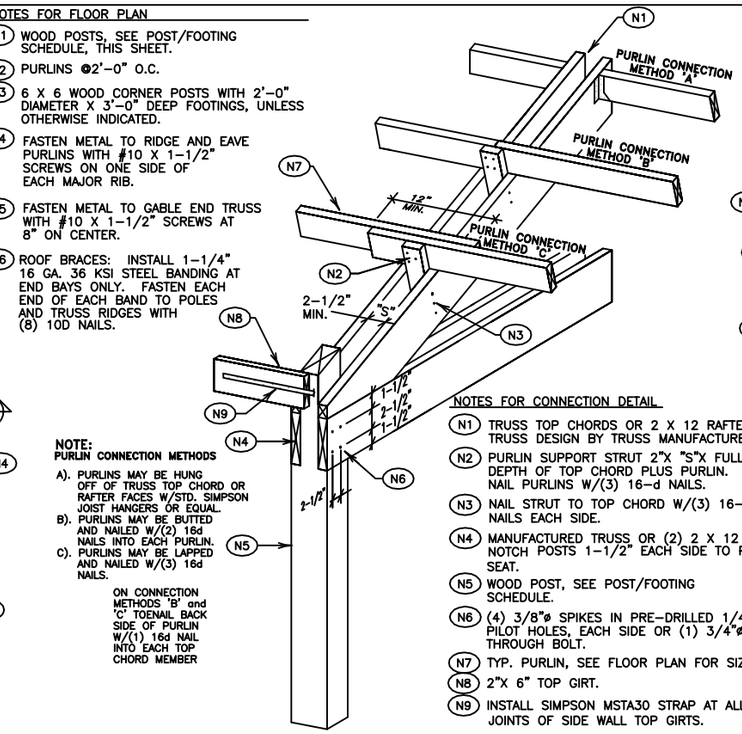

NOTE:
PURLIN CONNECTION METHODS

A). PURLINS MAY BE HUNG OFF OF TRUSS TOP CHORD OR RAFTER FACES W/STD. SIMPSON JOIST HANGERS OR EQUAL.
B). PURLINS MAY BE BUTTED AND NAILED W/(2) 16d NAILS INTO EACH PURLIN.
C). PURLINS MAY BE LAPPED AND NAILED W/(3) 16d NAILS.

ON CONNECTION METHODS 'B' and 'C' TOENAIL BACK SIDE OF PURLIN W/(1) 16d NAIL INTO EACH TOP CHORD MEMBER

NOTES FOR CONNECTION DETAIL

- (N1) TRUSS TOP CHORDS OR 2 X 12 RAFTERS, TRUSS DESIGN BY TRUSS MANUFACTURER.
- (N2) PURLIN SUPPORT STRUT 2"X "S"X FULL DEPTH OF TOP CHORD PLUS PURLIN. NAIL PURLINS W/(3) 16-d NAILS.
- (N3) NAIL STRUT TO TOP CHORD W/(3) 16-d NAILS EACH SIDE.
- (N4) MANUFACTURED TRUSS OR (2) 2 X 12 RAFTER - NOTCH POSTS 1-1/2" EACH SIDE TO PROVIDE SEAT.
- (N5) WOOD POST, SEE POST/FOOTING SCHEDULE.
- (N6) (4) 3/8"ø SPIKES IN PRE-DRILLED 1/4" PILOT HOLES, EACH SIDE OR (1) 3/4"ø THROUGH BOLT.
- (N7) TYP. PURLIN, SEE FLOOR PLAN FOR SIZE.
- (N8) 2"X 6" TOP GIRT.
- (N9) INSTALL SIMPSON MSTA30 STRAP AT ALL BUTT JOINTS OF SIDE WALL TOP GIRTS.

DETAIL 1 - TRUSS-COLUMN CONNECTION, PURLIN SUPPORT

N.T.S.

NOTES FOR WALL FRAMING DETAIL:

- (N1) MANUFACTURED TRUSSES.
- (N2) 2 X 6 OR 2 X 8 BLOCKING BETWEEN GIRTS OR U26 HANGER. NAIL BLOCKING TO POSTS W/ (6) 16d NAILS.
- (N3) 2 X 6 OR 2 X 8 GIRTS @ 24" O.C. TOE-NAIL TO POLES AND BLOCKING W/ (3) 16d NAILS OR INSTALL W/ SIMPSON U26 HANGERS.
- (N4) PRESSURE TREATED 2 X 6 BASE GIRT.
- (N5) PRESSURE TREATED 2 X 4 BASE GIRT.
- (N6) 4" THICK CONCRETE SLAB.
- (N7) POLE FOOTING
- (N8) PRESSURE TREATED POLE.
- (N9) 2 X 6 OR 2 X 8 STAGGERED BLOCKING AT MIDSPAN OF GIRTS. END NAIL TO GIRTS W/ (2) 16d NAILS.

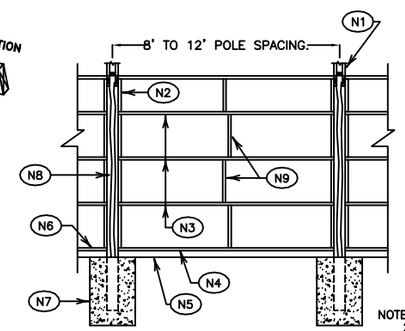

NOTES: 1) 2 X 8 GIRTS MAY BE SUBSTITUTED FOR 2X6 GIRTS TO OBTAIN DESIRED WALL THICKNESS, BUT ARE NOT REQUIRED FOR STRUCTURAL STRENGTH.
2) INSTALL BANDING AS SHOWN ON END WALL ELEVATIONS.

OPTIONAL WALL FRAMING ELEVATION

NOT TO SCALE

NOTES FOR FOOTING DETAIL

- (N1) TREATED POSTS AS SIZED PER SCHEDULE.
- (N2) VIBRATE OR ROD CONCRETE TO OBTAIN FULL BEARING.
- (N3) UNDISTURBED NATIVE STABLE SOIL.
- (N4) CONCRETE SLAB, OPTIONAL.
- (N5) 20D BOX NAILS, (36) NAILS AT POLES LOCATED AT SHEARWALL ENDS, (12) NAILS AT OTHER POLE LOCATIONS. NAILS TO EXTEND 1" TO 2" INTO CONCRETE
- (N6) TREATED 2" x 4" POST SUPPORT, OPTIONAL.

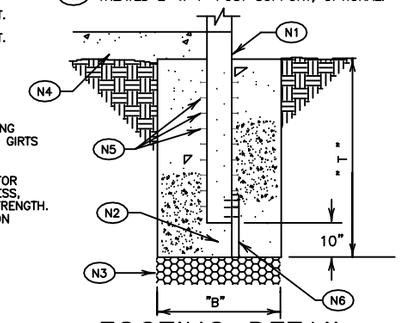

FOOTING DETAIL

NOT TO SCALE

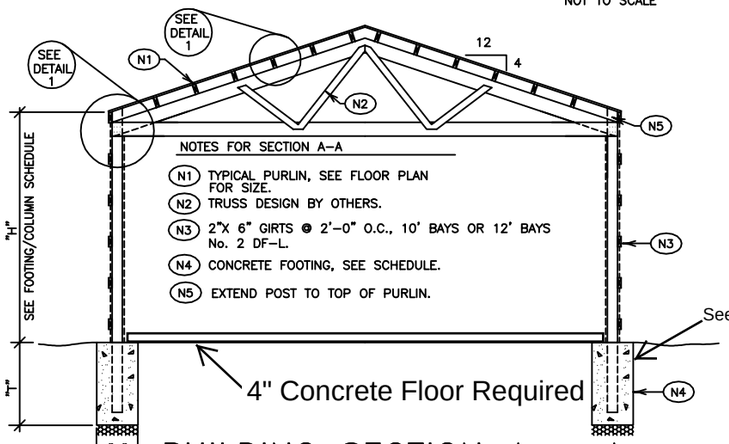

NOTES FOR SECTION A-A

- (N1) TYPICAL PURLIN, SEE FLOOR PLAN FOR SIZE.
- (N2) TRUSS DESIGN BY OTHERS.
- (N3) 2"X 6" GIRTS @ 2'-0" O.C., 10' BAYS OR 12' BAYS No. 2 DF-L.
- (N4) CONCRETE FOOTING, SEE SCHEDULE.
- (N5) EXTEND POST TO TOP OF PURLIN.

BUILDING SECTION A - A

NOT TO SCALE

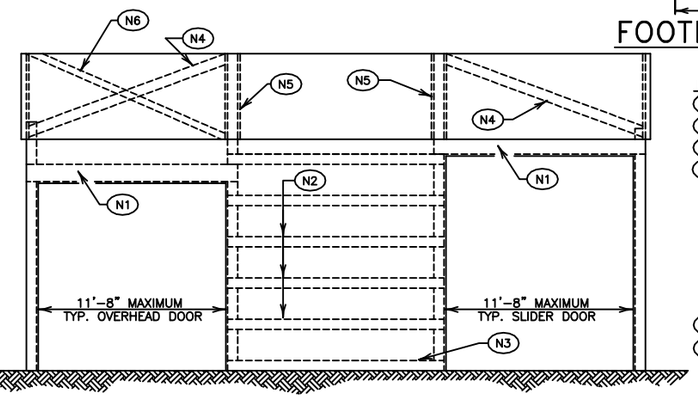

TYPICAL SIDE ELEVATION

NOTES FOR SIDE ELEVATION

- (N1) 2"X 8" HEADER.
- (N2) 2"X 6" GIRTS.
- (N3) TREATED 2"X 6" BOTTOM GIRT.
- (N4) CUT POSTS AT BOTTOM CHORD OF TRUSS AND PROVIDE (2) 2"X 6" DIAGONAL BRACE FROM BOTTOM CHORD OF GABLE END TRUSS TO TOP CHORD OF INTERIOR TRUSS. LOCATE BRACES AT EACH INTERIOR ENDWALL POST, FASTEN EACH END WITH SIMPSON U26-2 AND A35 TO TIE TOP OF BRACE TO TOP OF TRUSS CHORD.
- (N5) TRUSS, DESIGNED BY OTHERS.
- (N6) TRUSS MEMBER LATERAL BRACING SHALL BE DIAGONALLY BRACED TO ROOF DIAPHRAGM WITH DOUBLE 2 X 4 MEMBERS NAILED WITH (6) 12D NAILS IN EACH END.

NOTES FOR OPTIONAL END WALL ELEVATIONS

- (N1) HALF TRUSS DESIGN BY OTHERS.
- (N2) DOUBLE 2"X 8" HEADER, FASTEN TO POLES WITH (1) 3/4" THROUGH BOLT AND (3) 16D NAILS ON EACH END.
- (N3) 2"X 6" GIRTS @2'-0" O.C., NAIL TO POLES WITH (2) 20D RINGSHANK NAILS EACH END, ENDWALLS ONLY.
- (N4) WOOD POSTS, SIZED PER SCHEDULE.
- (N5) TREATED 2"X 6" BOTTOM GIRT.
- (N6) FASTEN TRUSS TOP CHORD, BOTTOM CHORD, AND BOTTOM GIRTS TO POLES WITH (10) 20D RINGSHANK NAILS AT EACH POLE CROSSING, END WALL SHEAR WALLS ONLY.
- (N7) 10' WIDE SHEAR WALL, NO OPENINGS ALLOWED WITHIN SHEAR WALL.

NOTE: FASTEN METAL TO SHEAR WALL AS SHOWN ON END WALL DETAIL.

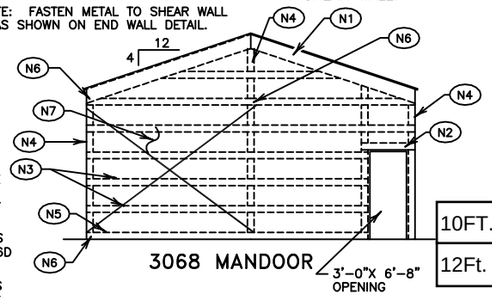

OPTIONAL END WALL ELEVATION

N.T.S.

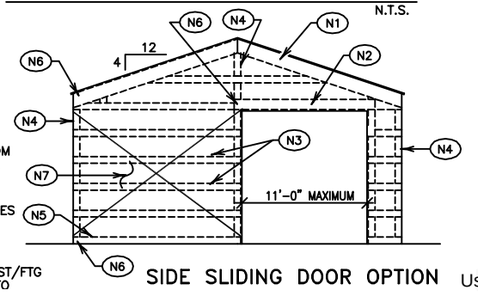

SIDE SLIDING DOOR OPTION

POST/FOOTING SCHEDULE

BAY SPACING	COLUMN "H"	COLUMN W X D	FOOTING "B" DIA.	FOOTING "T"	# OF BANDS REQD. PER ENDWALL BRACE	MAXIMUM BUILDING LENGTH
10' BAY (ENCLOSED BUILDING)	8'-0"	6"X 6"	2'-4"	3'-5"	1	60'
	10'-0"	6"X 6"	2'-4"	3'-8"	2	60'
	12'-0"	6"X 8"	2'-5"	4'-1"	2	60'
	14'-0"	6"X 8"	2'-6"	4'-4"	2	60'
	16'-0"	8X8 OR 6X9	2'-6"	4'-9"	3	60'
12' BAY (ENCLOSED BUILDING)	8'-0"	6"X 6"	2'-7"	3'-7"	1	60'
	10'-0"	6"X 6"	2'-7"	3'-9"	2	60'
	12'-0"	6"X 8"	2'-7"	4'-3"	2	60'
	14'-0"	8X8 OR 6X9	2'-7"	4'-8"	2	60'
	16'-0"	8"X 9"	2'-8"	5'-0"	3	60'
10FT. Open Bld	14'-0"	9" X 10"	2'-8"	4'-7"		60'
	16'-0"	9"x11"	2'-8"	4'-9"		60'
12Ft. Open Bld	14'-0"	9"x11"	2'-8"	4'-10"		60'
	16'-0"	10"x11-1/2"	2'-8"	5'-0"		60'

NOTES: 1) ALL BUILDINGS SHALL HAVE A MINIMUM OF ONE 8' WIDE SHEAR WALL ON EACH END WALL.
2) USE 6"X 6" POSTS AT ALL END WALL LOCATIONS, EXCEPT USE 6X8 POLES FOR 14' AND 16' TALL POLES. END WALL POLE FOOTINGS TO BE 2'øX3' DEEP, EXCEPT USE 3'øX3'-6" DEEP FOOTINGS AT SHEAR WALL POLE LOCATIONS.
3) INSTALL TRUSS LATERAL BRACING IN ACCORDANCE WITH MANUFACTURED TRUSS PLANS, BY TRUSS MANUFACTURER. TRUSS WEB MEMBER LATERAL BRACING SHALL BE DIAGONALLY BRACED TO ROOF DIAPHRAGM IN ACCORDANCE WITH THE TRUSS PLATE INSTITUTE HIB-91 SUMMARY SHEET.
4) OPEN BLDG. MEANS THAT THE BUILDING EXTERIOR WALLS ARE NOT SHEATHED OR COVERED.

MINIMUM SIDE WALL POST FOOTING SIZES FOR POLES WITH 14' WIDE MAXIMUM SIDE WALL LEAN-TO'S ATTACHED		
	"B" DIA.	"T"
10' BAY	3'-2"	4'-6"
12' BAY	3'-4"	4'-6"

Building specifications:
General- all building construction shall conform to the International Building Code (IBC), and all state and local building codes. In the event of code conflict, the more restrictive code shall apply.

Roof LL = 50 psf **Roof dead load = 5 psf**
Ceiling live load= 0 psf **Ceiling dead load 1 psf**
Wind Speed = 85 mph **Wind Exposure = B**
Seismic Design Category = C Max. Soil Pressure = 2000 psf

MAXIMUM SOIL BEARING PRESSURE IS BASED UPON SAND, SILTY SAND OR CLAYEY SAND (SW, SP, SM, & SC) SOILS OR BETTER. LESSER SOIL CONDITIONS WILL REQUIRE REVIEW AND FOOTING SIZE ADJUSTMENT BY THE ENGINEER.
CONCRETE - MINIMUM 28 DAY COMPRESSIVE STRENGTH = 2500 PSI. CAST-IN-PLACE CONCRETE CONSTRUCTION SHALL CONFORM TO ACI 318-05.
WOOD - STRUCTURAL LUMBER SHALL CONFORM TO DF-L NO. 2 OR BETTER BY WWPA GRADING RULES. MAXIMUM MOISTURE CONTENT SHALL BE 19% BY WEIGHT. NAILING SHALL CONFORM TO TABLE 2304.9.1 AND OTHER APPLICABLE SECTIONS OF CHAPTER 23 OF THE IBC. TREATED WOOD SHALL CONFORM TO THE REQUIREMENTS OF AWPB LB-22. TREATED POSTS SHALL HAVE A PRESERVATIVE RETENTION OF AT LEAST 0.6 POUNDS PER CUBIC FOOT. POSTS SHALL BE NO. 2 HEM-FIR OR BETTER BY WWPA GRADING RULES. ALL POST MATERIALS SHALL BE FULL DIMENSION. 6" X 8" POSTS MAY BE CONSTRUCTED OF A 6"X 6" WITH FULL LENGTH 2"X 6" NAIL LAMINATED TO POST INTERIOR. 6"X9" POSTS MAY BE CONSTRUCTED OF A 6"X6" WITH FULL LENGTH 2X6'S NAIL LAMINATED TO THE INTERIOR AND EXTERIOR FACES OF THE POLES. NAIL LAMINATE WITH (3) 16D NAILS AT 9" O.C. ALONG THE LENGTH OF THE POST. HARDWARE SHALL BE SIMPSON OR APPROVED EQUAL.
STEEL BOLTS - ALL STEEL BOLTS SHALL BE ASTM GRADE 307 OR BETTER.
METAL PANELS - METAL PANELS SHALL BE DELTA RIB STYLE GALVANIZED, MIN. 29 GA. GSG, GRADE E OR BETTER. PANELS SHALL BE FASTENED WITH GALVANIZED, GASKETED, SELF-DRILLING, METAL-TO-WOOD SCREWS. PANELS SHALL BE INSTALLED PER MANUFACTURER'S RECOMMENDATIONS WITH THE SCREW PATTERNS OUTLINED BELOW.
ROOF DIAPHRAGM SCREW PATTERN - FIELD SCREWS SHALL BE #10 X 1-1/2" LOCATED WITH ONE SCREW ON ONE SIDE OF EACH MAJOR RIB. SCREWS IN RIDGE AND EAVE PURLINS SHALL BE #10 X 1-1/2" LOCATED ON ONE SIDE OF EACH MAJOR RIB.
END WALL SHEAR WALL SCREW PATTERN - FIELD SCREWS SHALL BE #10 X 1-1/2" LOCATED WITH ONE SCREW ON ONE SIDE OF EACH MAJOR RIB. SCREWS IN TOP AND BOTTOM GIRTS SHALL BE #10 X 1-1/2" LOCATED ON ONE SIDE OF EACH MAJOR RIB.
SOIL COMPACTION - ALL BACKFILLED SOIL BENEATH SLABS SHALL BE COMPACTED WITH A VIBRATORY COMPACTOR TO 95% OF THE MAXIMUM DENSITY AS DETERMINED BY ASTM 1557.
TRUSSES - TRUSSES SHALL BE DESIGNED BY AND BEAR THE SEAL OF AN ENGINEER REGISTERED TO PRACTICE IN THE STATE OF WASHINGTON.

TRUSS LOADING:
TOP CHORD LIVE LOAD = 50 PSF
TOP CHORD DEAD LOAD = 5 PSF
BOTTOM CHORD DEAD LOAD = 1 PSF

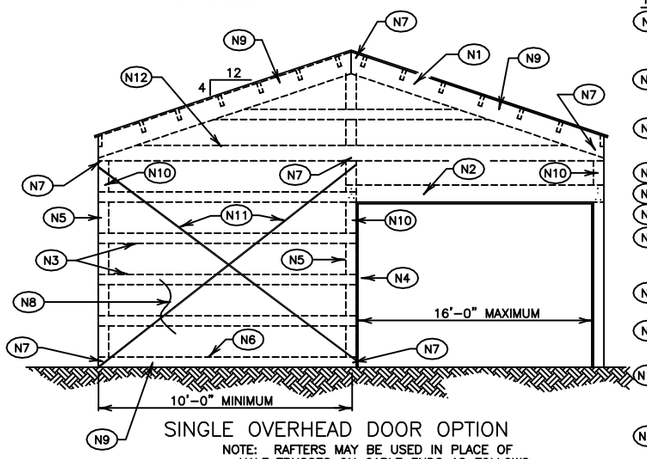

SINGLE OVERHEAD DOOR OPTION

NOTE: RAFTERS MAY BE USED IN PLACE OF HALF TRUSSES ON GABLE ENDS AS FOLLOWS: (2) 2 X 12 FOR 10' MAXIMUM GABLE END RAFTER SPAN AND (3) 2 X 10 FOR 12' MAX GABLE END RAFTER SPAN.

END WALL ELEVATION

0 1' 2' 4'
Scale

NOTES FOR END WALL ELEVATION

- (N1) HALF TRUSS DESIGN BY OTHERS OR GABLE END RAFTER. SUPPORT PURLINS @ END RAFTER W/ 2"X 8" OR 2"X 10" STD JOIST HANGERS, DEPENDING ON PURLIN SIZE.
- (N2) DOUBLE 2"X 8" HEADER, FASTEN TO POLES WITH (1) 3/4" THROUGH BOLT AND (3) 16D NAILS ON EACH END.
- (N3) 2"X 6" GIRTS @2'-0" O.C., NAIL TO POLES WITH (2) 20D RINGSHANK NAILS EACH END, ENDWALLS ONLY.
- (N4) 2"X 8" FACING BOARDS.
- (N5) WOOD POSTS, SIZED PER SCHEDULE.
- (N6) TREATED 2"X 6" BOTTOM GIRT.
- (N7) FASTEN TRUSS TOP CHORD, BOTTOM CHORD, AND BOTTOM GIRTS TO POLES WITH (10) 20D RINGSHANK NAILS AT EACH POLE CROSSING, END WALL SHEAR WALLS ONLY.
- (N8) 10' WIDE SHEAR WALL, NO OPENINGS ALLOWED WITHIN SHEAR WALL.
- (N9) FASTEN METAL TO TRUSS TOP CHORD AND BOTTOM GIRT WITH #10 X 1-1/2" SCREWS ON ONE SIDE OF EACH MAJOR RIB.
- (N10) INSTALL 2 X 6 BLOCKING BETWEEN GIRTS AT POSTS WITH (2) 20D NAILS. FASTEN PANEL EDGES TO GIRTS AND BLOCKING WITH #10 X 1-1/2" SCREWS AT 9" O.C.
- (N11) END WALL BRACES: INSTALL 1-1/4" X 16 GA., 36 KSI STEEL BANDING AS INDICATED IN THE POST/FTG SCHEDULE. FASTEN EACH END OF EACH BAND TO POLES WITH (22) 10D GALVANIZED NAILS.
- (N12) DOUBLE 2X6 SHEAR WALL TOP GIRT.

NOTE: GABLE END WALL METAL SHALL BE CONTINUOUS FROM BOTTOM GIRT UP TO TRUSS TOP CHORD.

Pend Oreille County

25Ft. to 30 Ft. Truss Span Buildings

Use of these drawings shall be limited to general, Non-Commercial Construction in Pend Oreille County. Pend Oreille County does not accept responsibility any other uses outside its jurisdiction and is not responsible for construction that deviates from the original design drawings.